Cat. no. AT1052 Galileo Setup - English

Galcon
Computerized Control Systems
The Science of Solutions

GALILEO
Setup

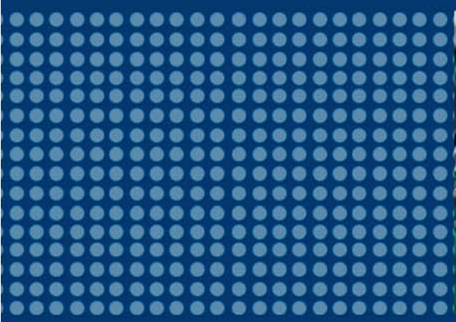

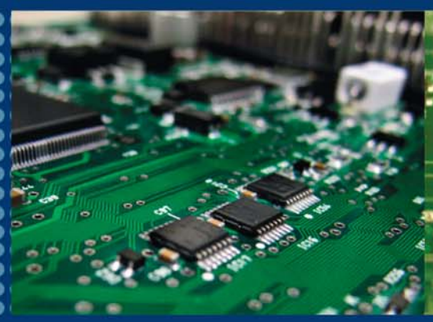

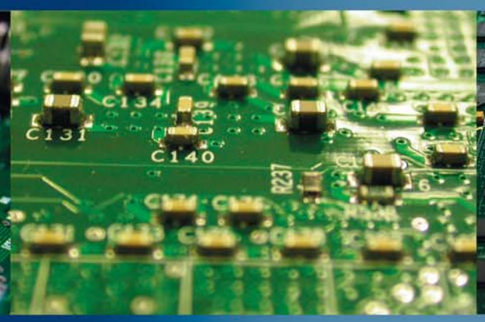

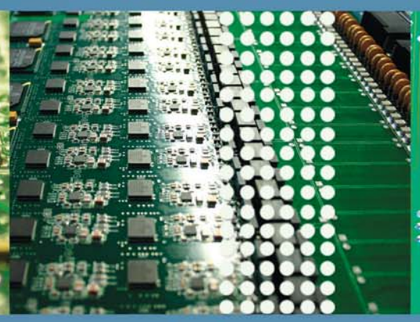

Hardware and Accessories
Setup and Utility

Galileo Setup - English

Galcon
Computerized Control Systems
The Science of Solutions

GALILEO SETUP

Hardware and Accessories
Setup and Utility

Index

1) General **4**
1.1) Galileo Controller – General Description **4**
1.2) Hardware General specifications **4**
1.3) I/O modules **5**
1.4) Other specifications **6**
2) Hardware Description **8**
2.1) Galileo WEX / WEXX **8**
2.1.1) Galileo WEX / WEXX Box **8**
2.1.2) Connecting the protections **9**
2.1.3) Galileo WEX with all type of cards **10**
2.1.4) The Power Supply **11**
2.1.5) CPU Card **12**
2.1.6) Input / Output Cards **13**
2.1.6.1) C2000-04 : 8 Discreet Inputs and 16 - 24 VAC Outputs **13**
2.1.6.2) C2000-10 : 24 VAC Outputs **14**
2.1.6.3) C2000-05 : 16 – Analog Input **15**
2.1.6.4) C2000-15 : Cable RTU Adapter Card **16**
2.1.6.5) C2000-13 : Radio RTU Adapter **17**
2.1.7) Protections **18**
2.1.7.1) 8 Inputs/16 outputs Protection Card **18**
2.1.7.2) 24 Outputs Protection Card **19**
2.1.7.3) 16 Analog Protection Card **20**
2.1.8) L-485 – Controller-PC Cable Communication Adapter **21**
2.1.9) Inputs / 8 Outputs DC Latching Card **21**
2.2) Product Drafts (Old Models) **22**
3) Key Board And Display **25**
3.1) Galileo W **25**
3.2) Galileo keyboard and LCD (Old Models) **27**
4) Terminology **29**
5) Defining Controller Number, Communication and I/O cards **31**
5.1) Communicaiton Definitions **31**
5.2) Defining I/O cards **31**
6) Outputs and discrete inputs setup **33**
7) Sensors connection **37**
8) Utilities and final preparations **40**
Appendix 1: Cable Remote Terminal Units (CRTU) **42**
Appendix 2: Radio Remote Terminal Units (RRTU) **52**
Chapter 1: Setup of the RRTU Adapter Card **55**
Chepter 2: Operating the RRTU Programmer **62**

1. General

1.1 Galileo Controller – General Description

Galileo is a high performance controller based on the Intel® 188 processor. This unique system, developed at the Galcon's laboratories, enables us to write applications (climate control, irrigation, , nursery etc.) in full 'C' language, ensuring a flexible, reliable, stable, and yet sophisticated program.

At the time of purchase, you already know the application for which your controller will be used, and consequently the suitable program will be loaded. The application will not be covered in this part of the Product Manual. This section will only explain the basics of connecting and using the controller. Most of the information provided is suitable for all applications.

Galileo Controllers differ from traditional industrial controllers by being hardware customized to suit the environmental requirements of agricultural control. Simple to operate elements, such as valves, and input elements such as water meters, can be directly connected to the Controller's outputs without requiring complex electrical adjustments.

- Note: Guidelines regarding the control system environmental requirements are presented in the Pre-installation booklet that can be obtained by your local distributor when the system is ordered. Reading and following the instructions in the booklet is important. The booklet can also be obtained at **www.galconag.com**

1.2 Hardware General specifications:

Memory type	Galileo (all types)
EPROM	128K
FLASH	---
EPROM[2]	---
CMOS RAM	512K
Discrete inputs	1024
Analog Inputs	640
Outputs	1024

Note: The application may use only a small part of available logical I/O elements. Refer to the information about specific applications.

General .1

1.3 I/O modules:

2 models can be expanded (Galileo W and Galileo 2000) and 2 include fixed hardware. The next table describes the modules applicable for expandable controllers and their application validity.

Catalog #	Description	Discr-ete inputs	Analog inputs 4-20 mA	AC Triac outputs	DC Latch PNP outputs	RTU port	Available for Galileo 2000/W	Available for Galieo 32/16/W
AMC0113/ AMC0131	8/16 I/O Card For Galileo 2000 8/16 I/O Card For Galileo W	8	---	16	---	---	√	√*
AMC0102 AMC0132	16 Analog Card for Galileo W 16 Analog Card for Galileo 2000	---	16	---	---	---	√	√*
AMC0105 AMC0133	24 Outputs Card for Galileo 2000 24 Outputs Card for Galileo W	---	---	24	---	---	√	√*
AMC0104 AMC0134	8/8 I/O Card for Galileo 2000 DC 8/8 I/O Card for Galileo W DC	8	---	---	8 ON pulse, 8 OFF pulse	---	√	√*
AI0705 AMC0139	RRTU Adapter For Galileo 2000 RRTU Adapter For Galileo W	---	---	---	---	Radio	√	√*
AMC0112 AMC0137	CRTU Adapter AC Fast Galileo 2000 CRTU Adapter AC Fast For Galileo W	---	---	---	---	Cable	√	√*
AMC0110	GALILEO 32 I/O/A CARD	8	14	32				√
AMC0106	GALILEO 16 I/O/A CARD	8	8**	16				√

*Applicable within expansion unit casing.

** Analog inputs 1-6 are disabled in Galileo 16. The first connectable input is #7

1. General

1.4 Other specifications:

Model	Galileo 2000/W	Galileo 32/W	Galileo 16/W
Regional network	24	24V	24V
Max. Consumption Watt	100	80	80
Mains circuit breaker (A)	8	10	10
Voltage Tolerance	-10%+15%	±20%	±20%
Power supply module	24V	24 V	24 V
CPU, Electronic devices	DC 5V 1A	DC 5V 400mA	DC 5V 400mA
Outputs	~24V 5.5A (external supply)	~24V 3.15A	~24V 3.15A
Analog inputs	DC 24V 1A	DC 24V 700mA	DC 24V 700mA
Discrete inputs	DC 12V 400mA	DC 12V 100mA	DC 12V 100mA
Output type	Triac BTB 600	Triac BTB 600	Triac BTB 600
Repetitive peak OFF state Voltage Vdrm(V)	600V	1000V	1000V
Isolation Voltage (AC) Viso(rms) (kV)		3500V	3500V
Max. load per single out.	1A	500mA	500mA
Output type:	Power FET transistor	Power FET transistor	Power FET transistor
Output Voltage:	12÷14V DC	12÷14V DC	12÷14V DC
Pulse length	80ms	80ms	80ms
Isolation Voltage (AC) Viso(rms) (kV)			
Supplied “common” voltage	9 ÷ 15V DC	9 ÷ 15V DC	9 ÷ 15V DC
Minimum ON time	250 ms	250 ms	250 ms
Minimum OFF time	250 ms	250 ms	250 ms
Total read minimum cycle	500 ms	500 ms	500 ms
Impedance	2 KΩ	1 KΩ	1 KΩ
Current	5 ÷ 8 mA	10 ÷ 15 mA	10 ÷ 15 mA

General .1

Analog inputs : I/O Modules: C2000-5, C6000, EMD01			
Model	**Galileo 2000/W**	**Galileo 32/W**	**Galileo 16/W**
Input type	4-20 mA	4-20 mA	4-20 mA
Input impedance	100	100	100
Resolution	12 bit	12 bit	12 bit
Galvanic isolation	3500V	3500V	3500V
Conversion time	500 ms	500 ms	500 ms
Absolute Max. rating	3V DC / 30 mA	3V DC / 30 mA	3V DC / 30 mA
Full scale error	2.5%	2.5%	2.5%
Linearity error	0.3%	0.3%	0.3%
Communication ports			
Socket type	1- RJ45 2- RJ45	1- RJ45 2- RJ11	1. RJ45 2. RJ11
Protocol	1-RS-232 2- RS-485	1- RS-232 2- RS-485	1- RS-232 2- RS-485
Function	1- MMI 2 - Expansion	1- MMI 2 - Expansion	1- MMI 2- Expansion
Possible baud rate B.P.S	Up to 19200	Up to 19200	Up to 19200

The following is applicable for all models:

- **The power source must be surge protected.**
- **Mount the controller in a location that is dry and shaded.**
- OVERVOLTAGE CATEGORIES, II;
- Maximum environmental temperature: 50°C/122°F (L.C.D maximum temp: 40°C/104°F)
- Minimum environmental temperature: -18°C/0°F (L.C.D. minimum temp: -4°C/25°F)
- Operation altitude: -400 m bsl (-1200 ft) to 2600m (8,500 ft)
- Relative humidity must not exceed 80%.
- **Avoid high vibrations.** Do not install on the same frame with diesel motors or any other vibrating device.
- **Avoid corrosive remains or vapors** in the controller room**.**
- **Avoid near-by high frequency spikes** caused by relays or other electric devices**. Avoid static electricity.**
- **Ground connection of power source ≤ 3Ω**
- **All inputs and outputs must be surge protected.** Use of Galcon's OPT, IPT and APT protection blocks is recommended.

Product pollution degree: 2.

2. Hardware Description

2.1 Galileo WEX / WEXX:

2.1.1 The Casing:

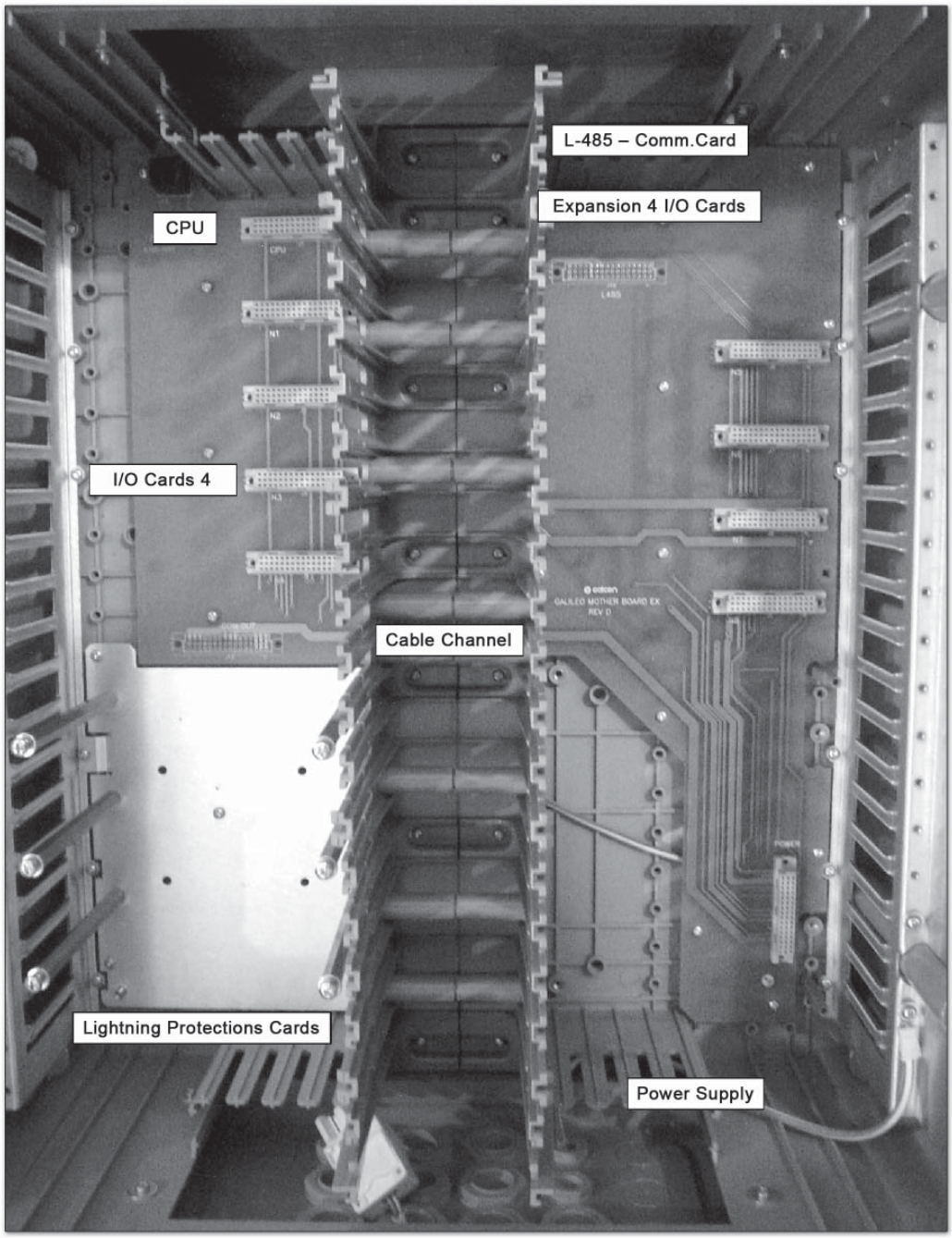

- The cards are set in two columns. In between, a special cable channel is located.
- It is possible to “chain” several boxes. In this case the cables are inside the linked boxes.
- The communication adapter (L-485), fits into the controller.
- The lightning Protection Cards fit into the controller’s box.

Hardware Description .2

2.1.2 Connecting the Lightning Protection Cards

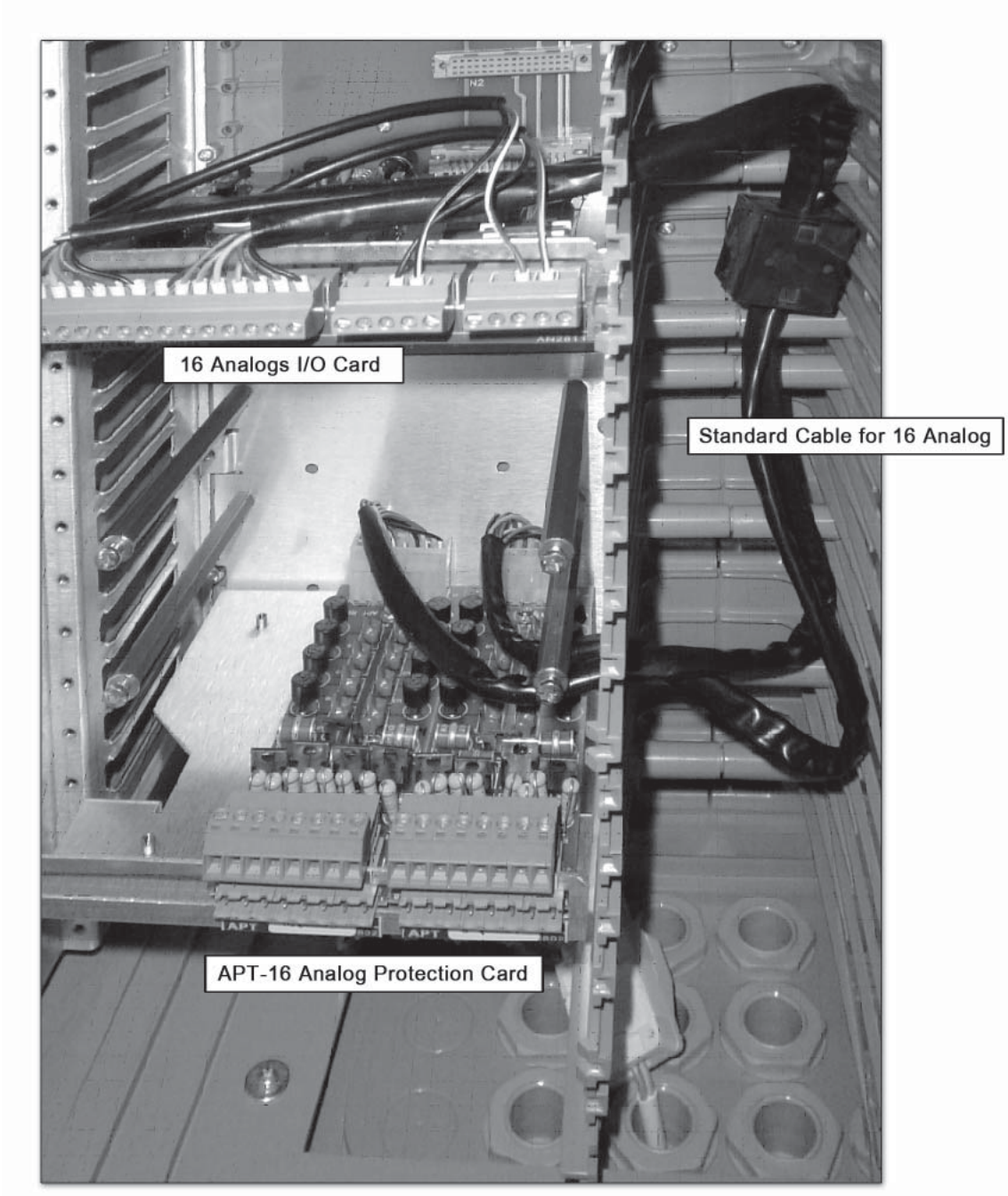

- The connection between the I/O card and the Protection Card is via a standard cable (prepared at the factory).

2. Hardware Description

2.1.3 Galileo WEX with all types of cards:

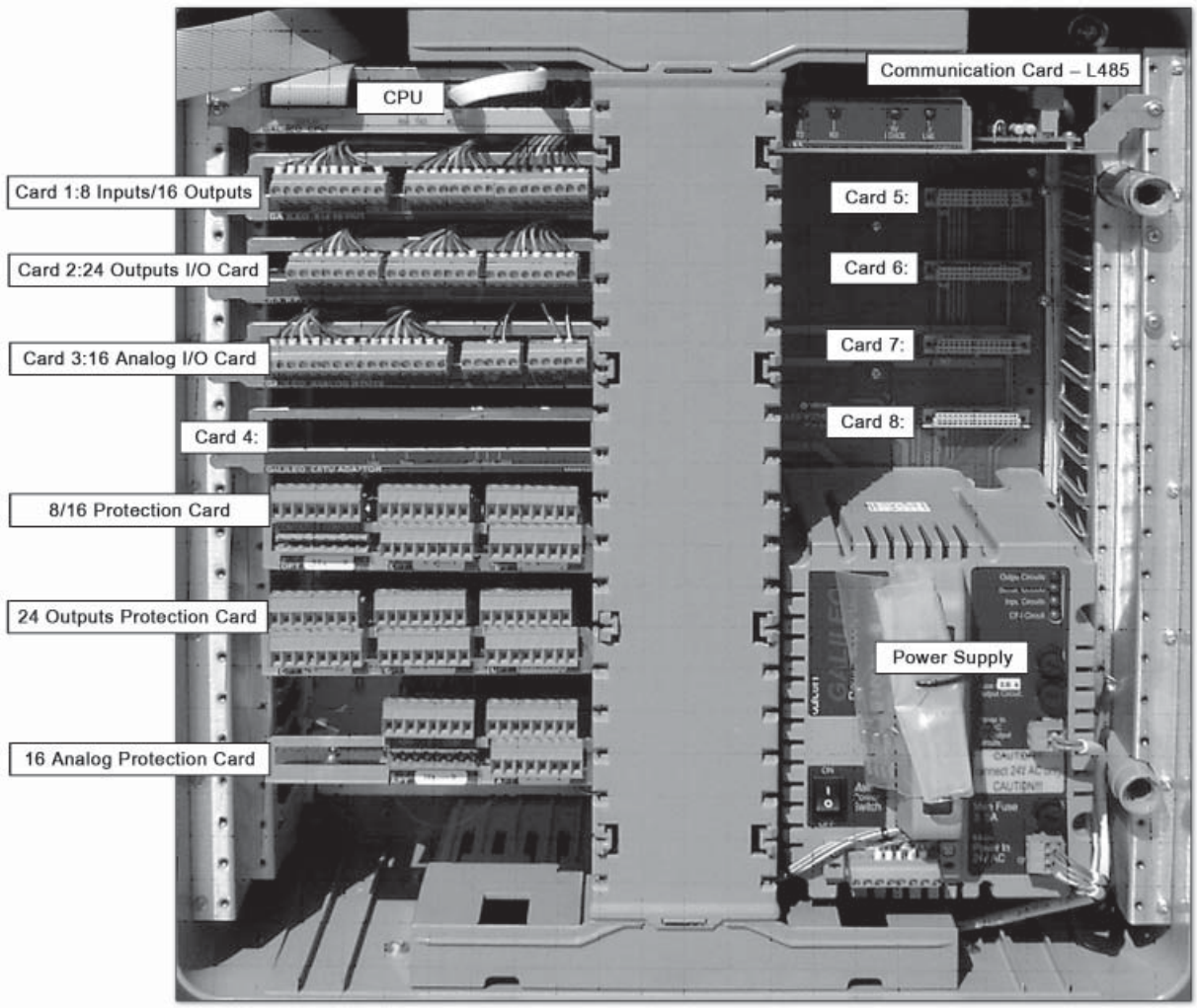

Hardware Description .2

2.1.4 The Power Supply:

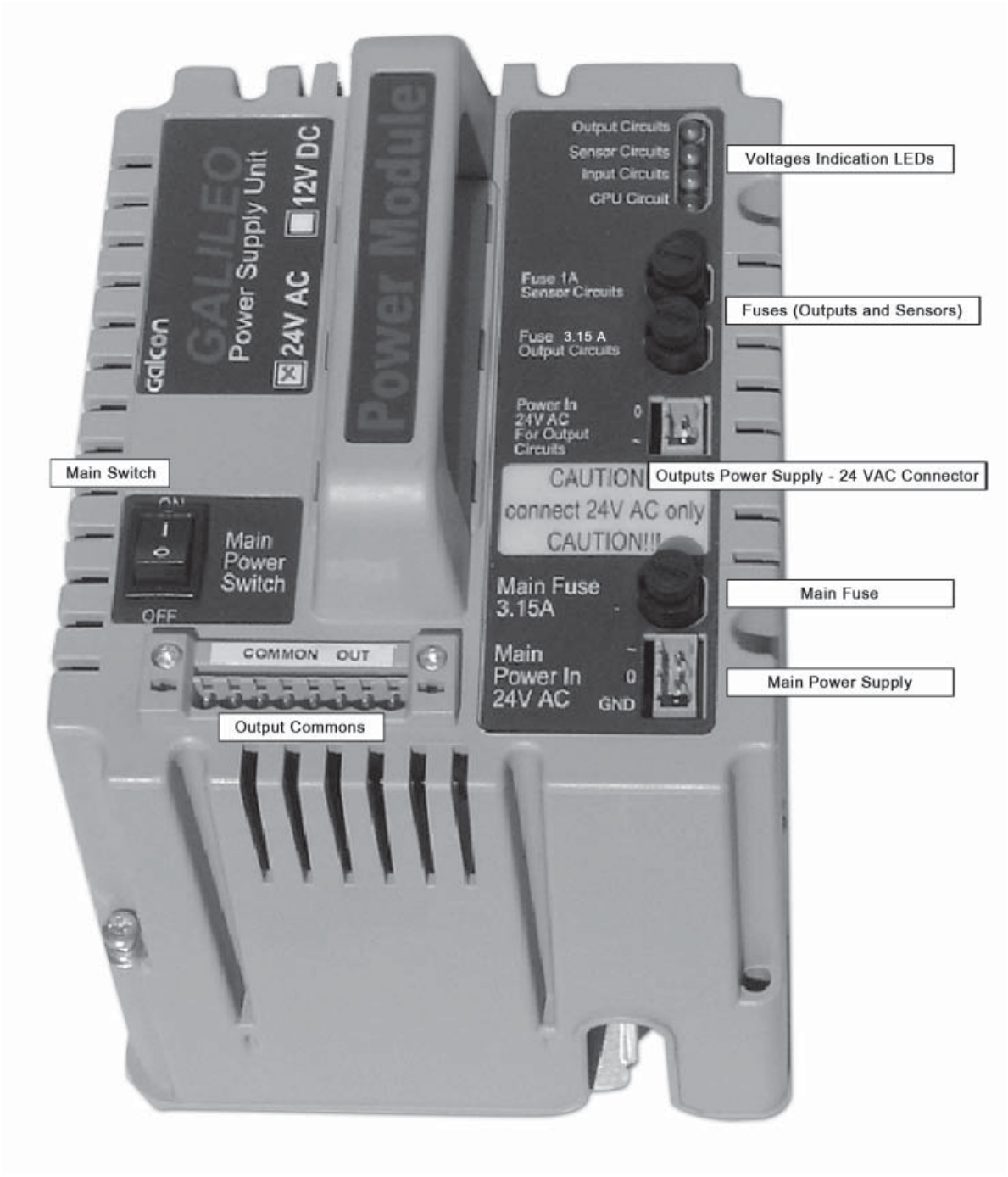

2. Hardware Description

2.1.5 CPU Card:

The CPU Card is the “brain” of the system. It includes (amongst other components): The main processor (Intel 188), three types of memories (EPROM, FLASH, RAM), communication components and a clock. It performs all controller’s tasks via communication with the Input / Outputs cards and via communication with a PC computer.

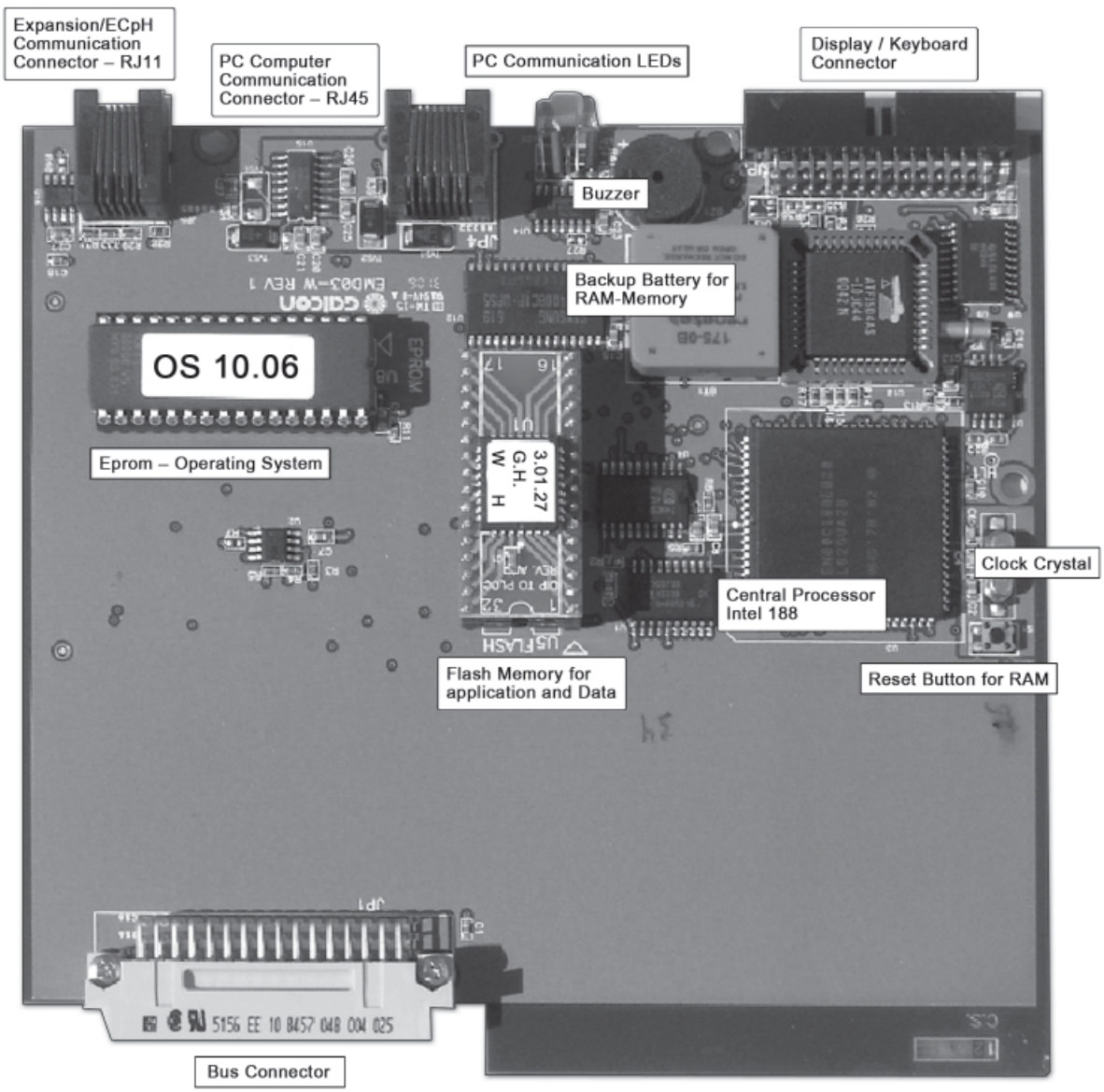

Hardware Description .2

2.1.6 Input / Output Cards:

Each of the I/O slots (see picture of “Empty Controller”) can be fitted with one of the following cards: The I/O card is connected to the bus which eventually connects it to the CPU.

2.1.6.1 C2000-4 : 8 Discrete Inputs and 16 - 24 VAC Outputs:

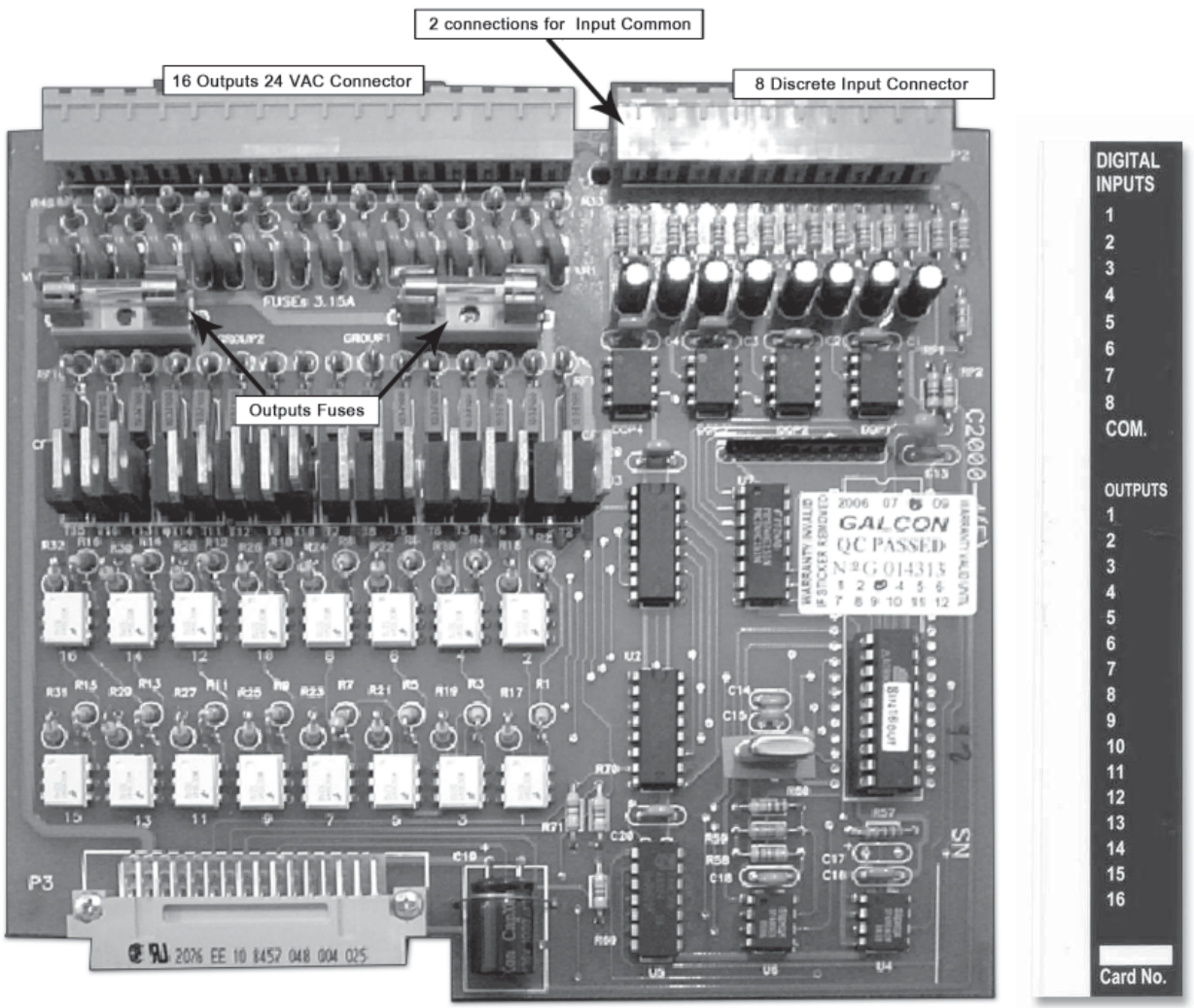

- 16- 24 VAC Outputs
- 8 discrete inputs (dry contact)
- Output commons are located at the power supply
- One 1A Fuse protects every 8 outputs

2. Hardware Description

2.1.6.2 C2000-10 : 24 – 24 VAC Outputs:

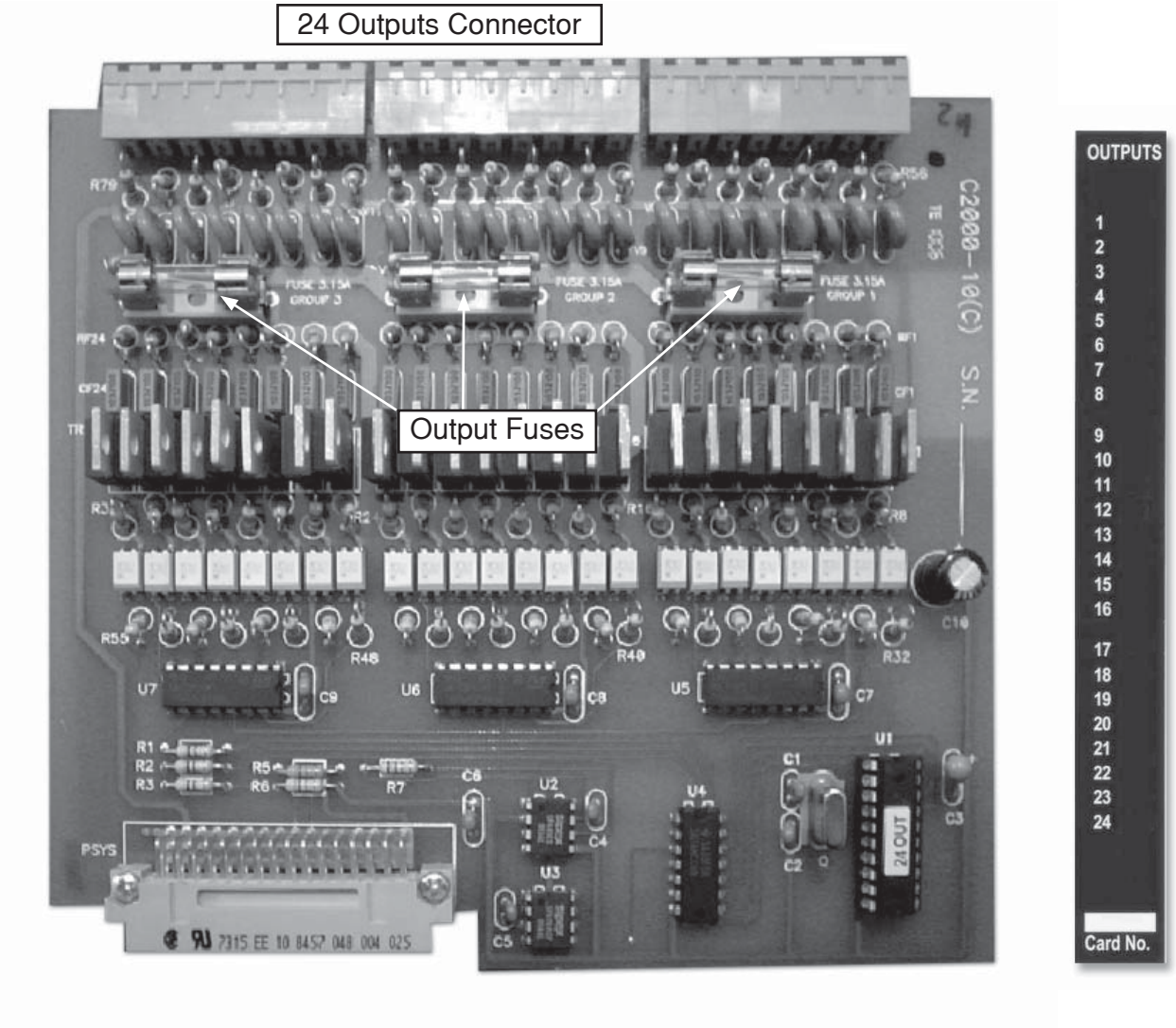

- 24 - 24 VAC Outputs.
- Each fuse protects 8 Outputs
- The Output Common Connectors are located at the Main Power Supply Unit.

Hardware Description .2

2.1.6.3 C2000-05 : 16 – Analog Input:

+24VDC, Common.
Analog - Passive
Sensor

4-20mA Analog Input Connector

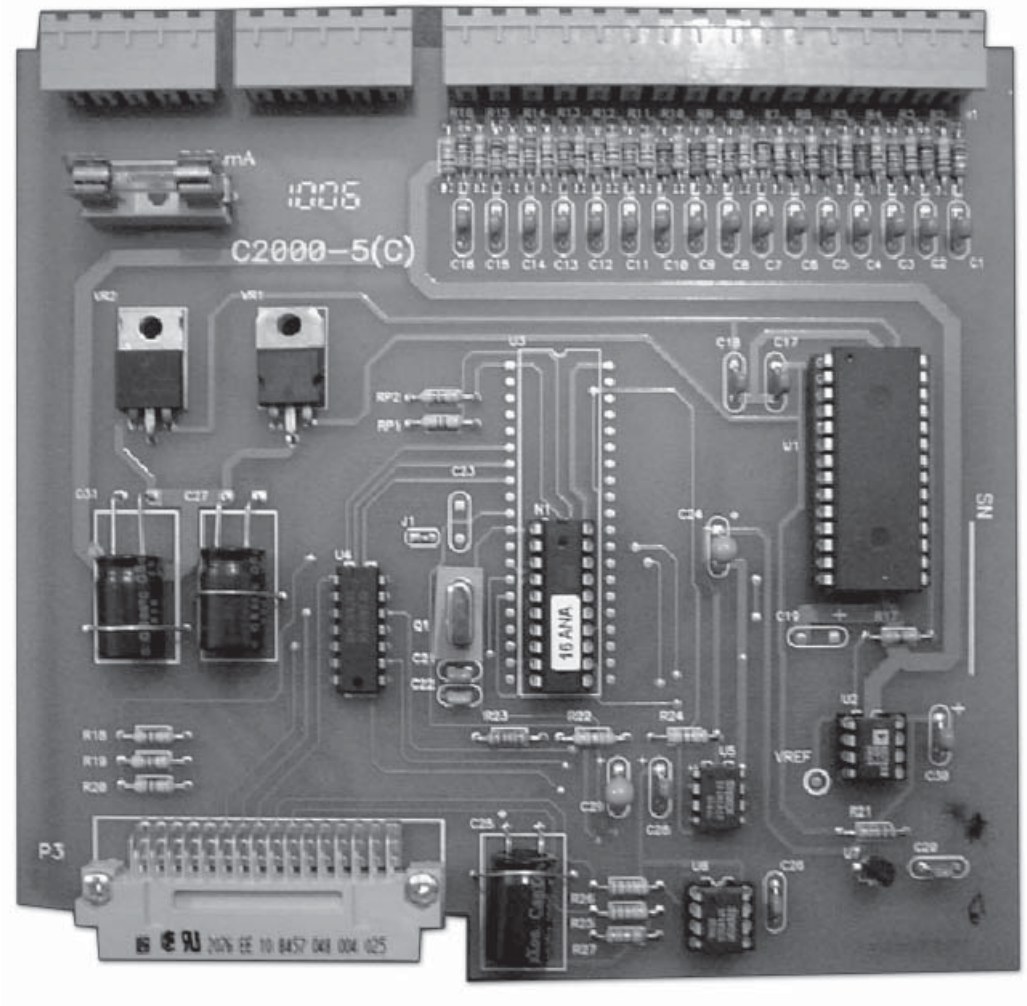

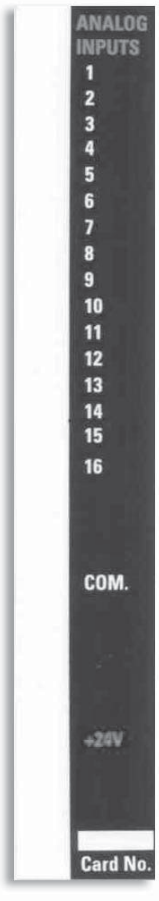

- 16 Analog Inputs
- (+)24 V Direct Current Connectors for Passive Sensors (receive the power from the controller).
- (-)24 V Direct Current Connector for Active Sensors (Sensors with independent power supply)

2. Hardware Description

2.1.6.4 C2000-15 : Cable RTU Adapter Card:

Cable RTU Communication - 3 wires Connector

Communication Indication LEDs

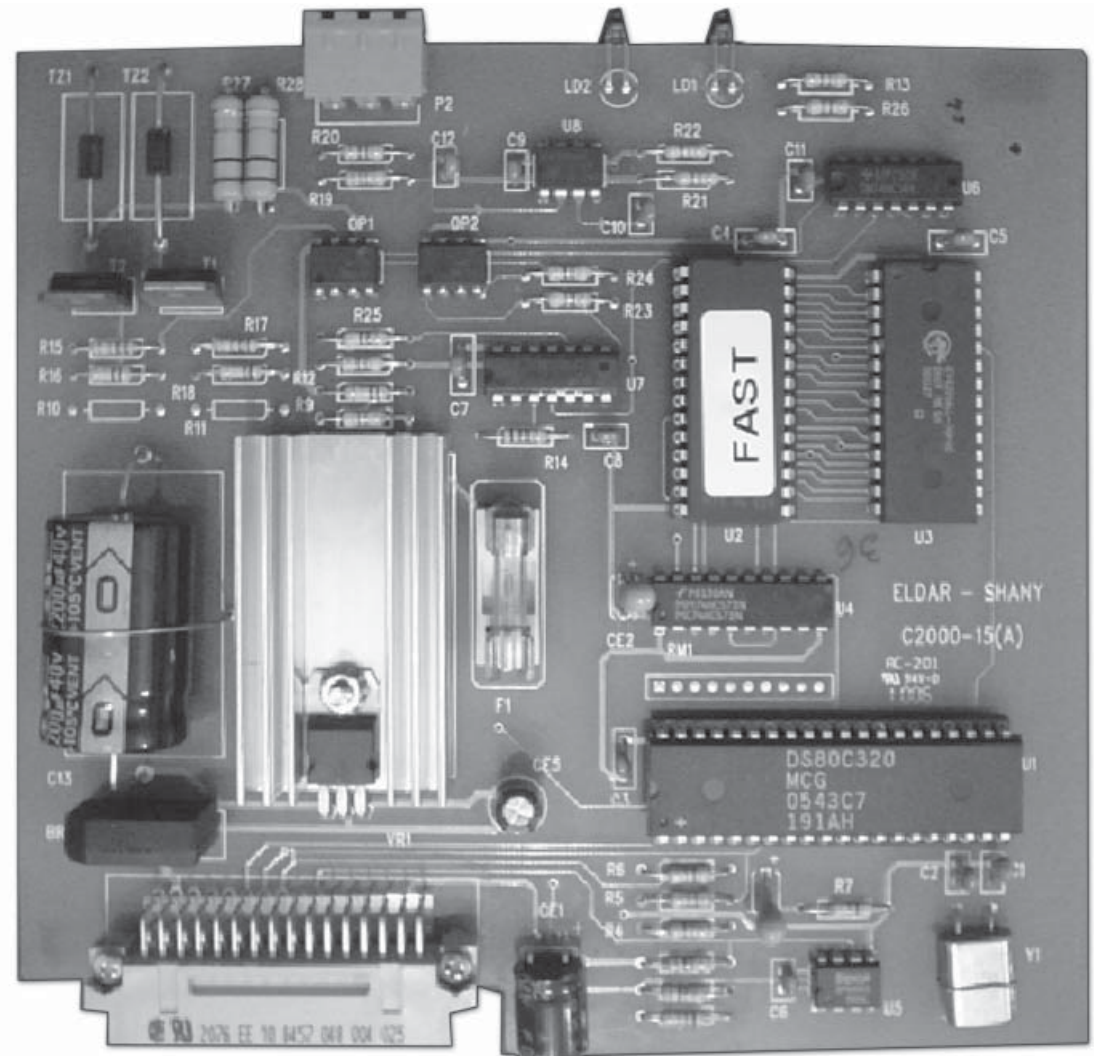

- The connection scheme of the 3 wire connector (From left to right): “Common”, “Communication”, “Power Supply”.

Hardware Description .2

2.1.6.5 Radio RTU: Adapter Card

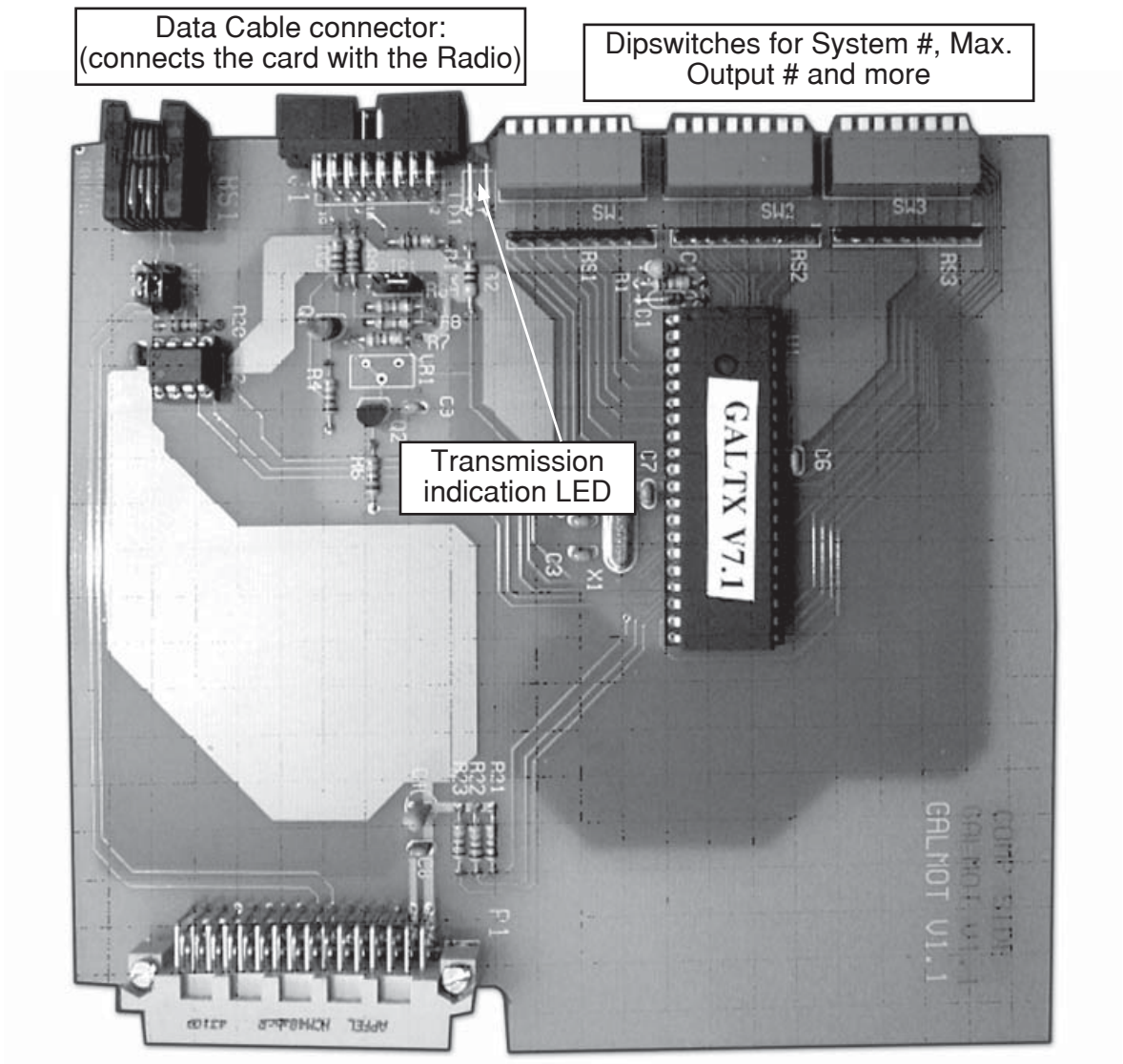

- It is possible to control up to 256 different latch type outputs.
- The card is part of the assembly called SRT – Serial Radio Transmitter.

2. Hardware Description

2.1.7 Protections:

Although the I/O cards are integrally protected, it's recommended to add the lighting protection cards (especially where lighting is a common phenomenon). It should be noted that there is no 100% guaranty in the case of lighting. However lightning protection cards can prevent a lot of damage in many cases. In Galileo W the lighting protections are fitted into the box with three different protection cards (each type suits a different I/O type card).:

2.1.7.1 8 Inputs/16 outputs Protection Card:

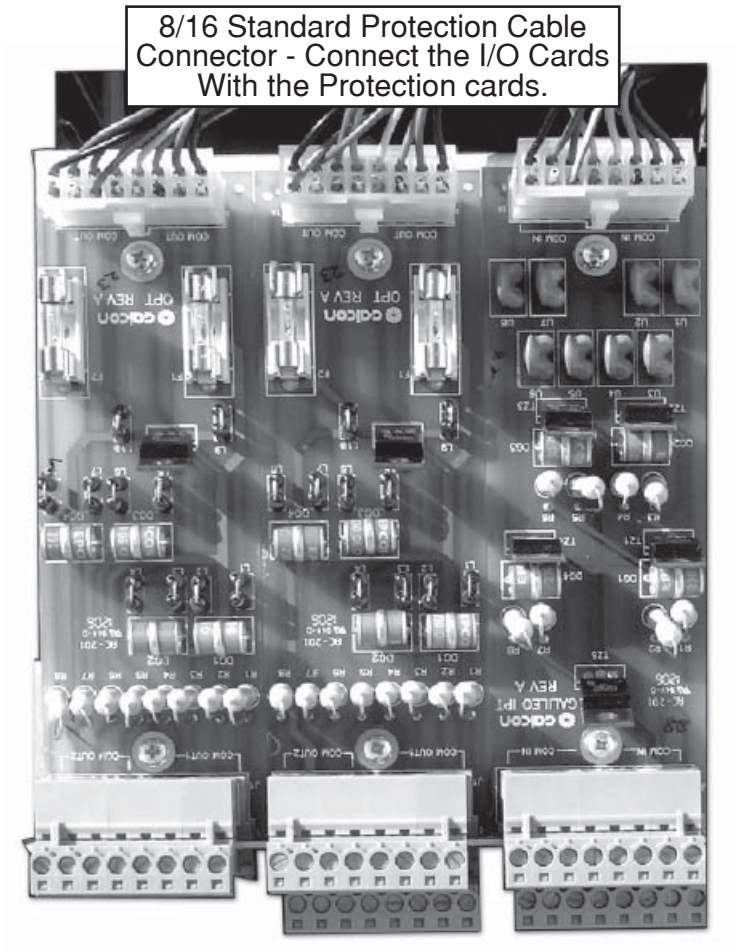

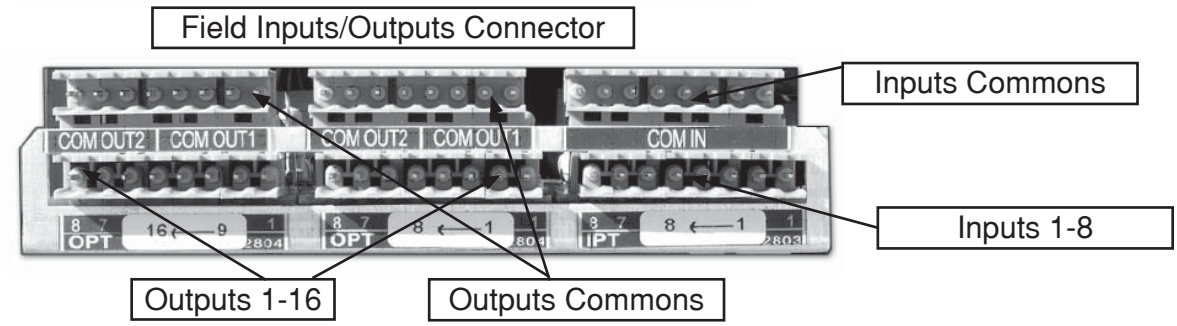

Hardware Description .2

2.1.7.2 24 Outputs Protection Card

24 Outputs Standard Protection Cable Connector – Connects the I/O Cards with the Protection cards.

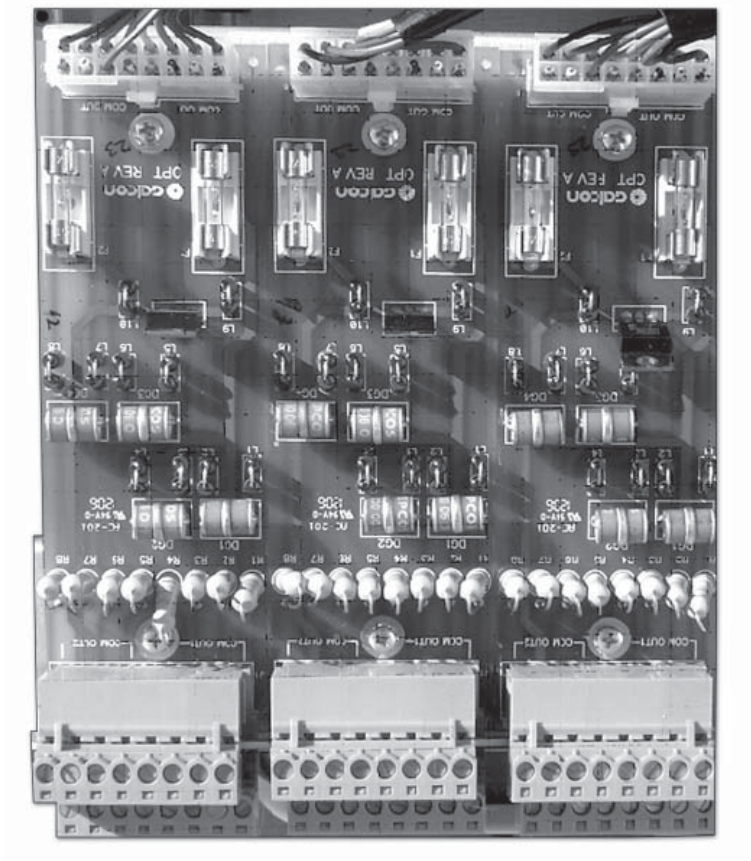

Field Outputs Connectors

Commons Outputs

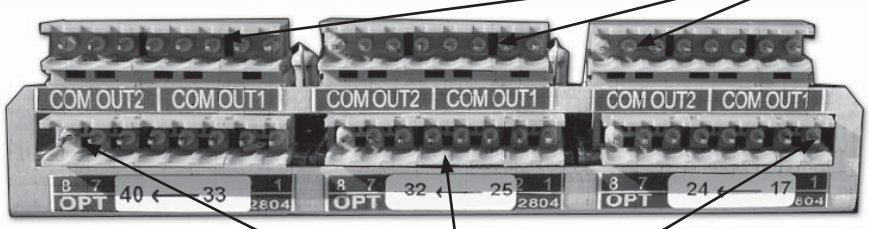

Outputs 1-24

2. Hardware Description

2.1.7.3 16 Analog Protection Card:

16 Analog Standard Protection Cable Connector - Connects the I/O Cards with the Protection cards

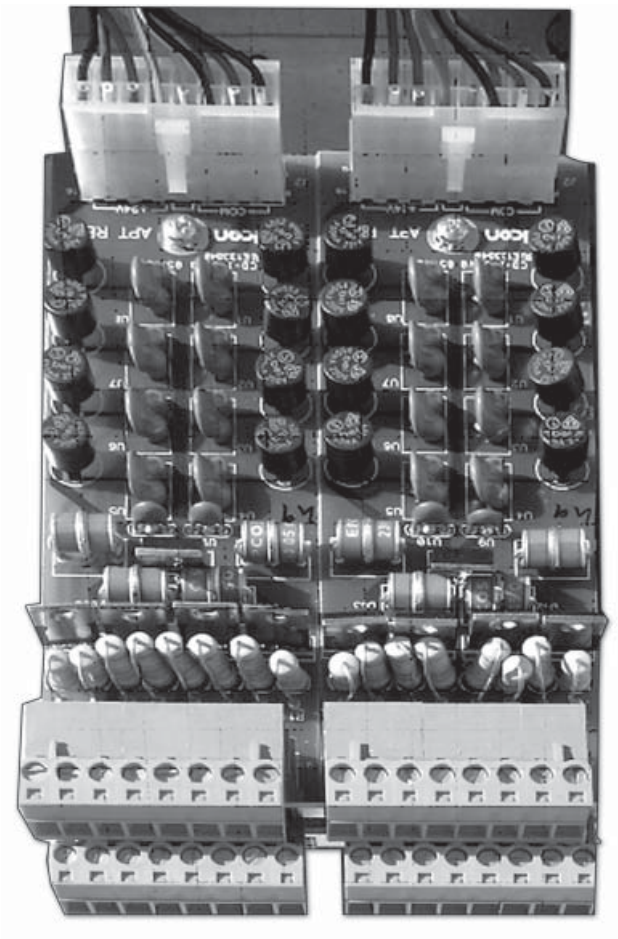

Field Sensor Connectors

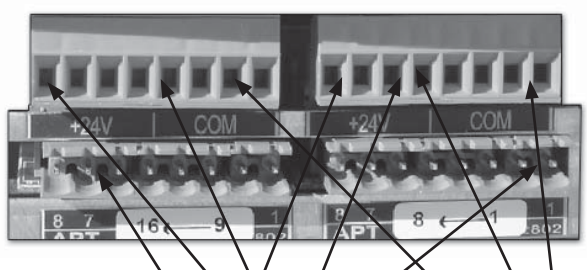

Com 24 DVC

Com Analog

Analog inputs 1-16

Hardware Description .2

2.1.8 L-485 - Controller-PC Cable Communication Adapter

The card is fitted into the Galileo W Box (See empty box photo).

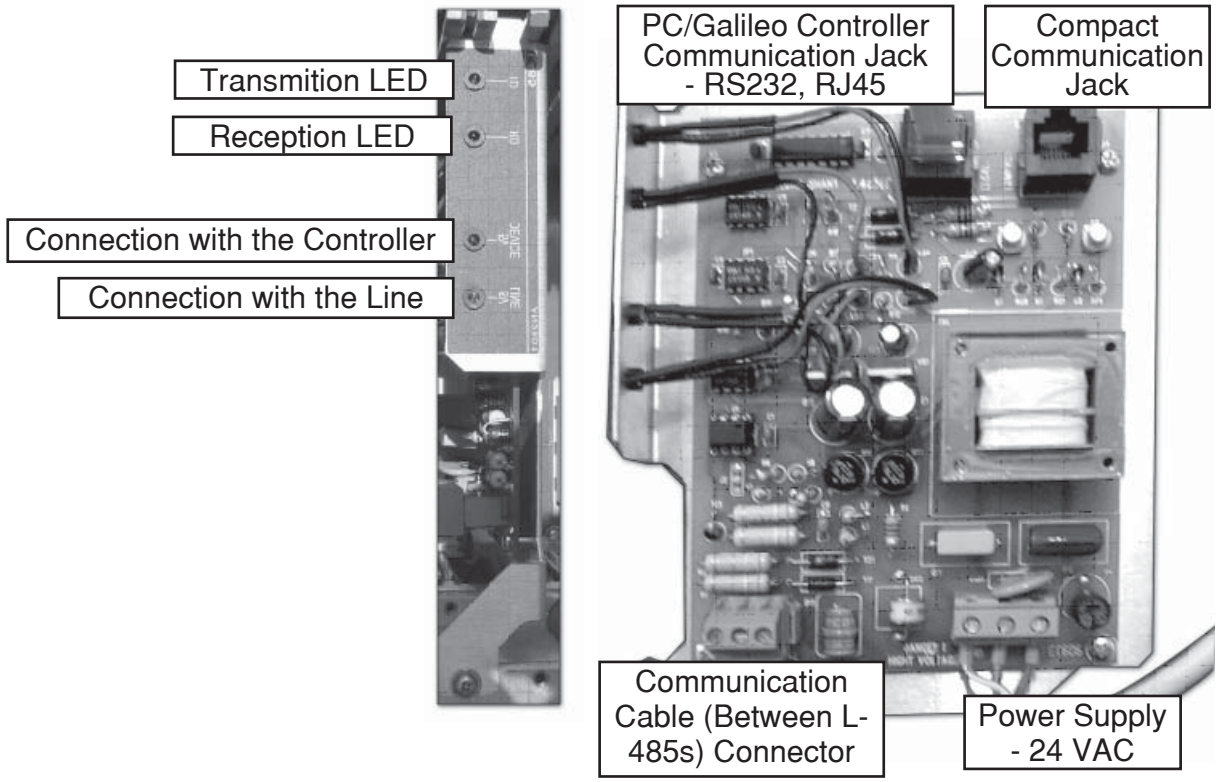

2.1.9 Inputs / 8 Outputs DC Latching Card:

In a DC system (in order to save energy) latching technology is used. Galileo latching uses 3 wire outputs. The card contains 8 discrete inputs (the same as in the AC model) along with 8 Outputs. Each output is two connections(Open/ Close). The commons are connected at the middle connector (2 connections).

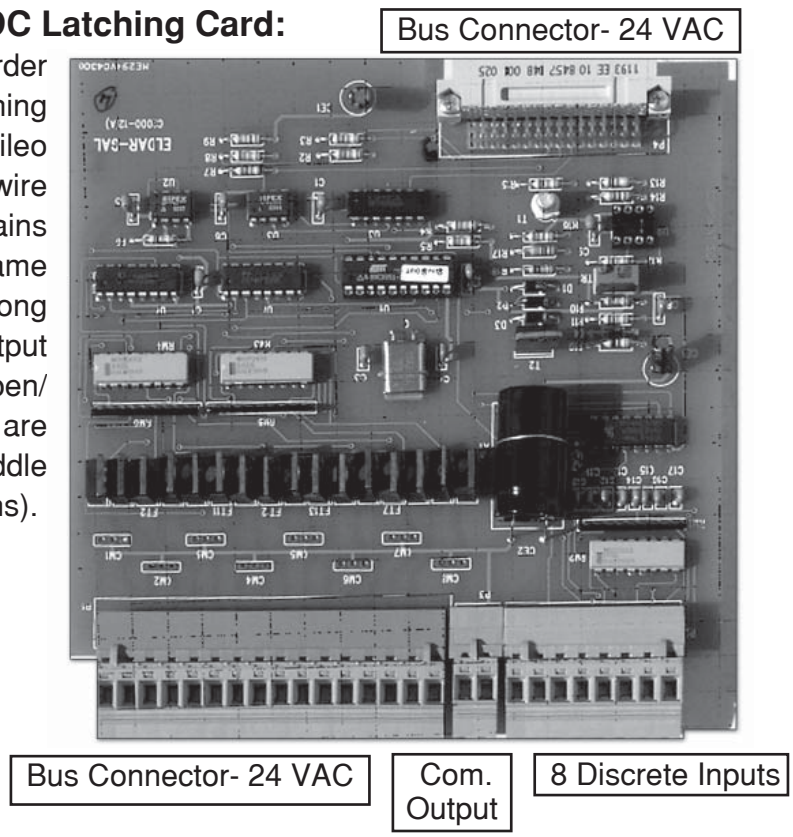

2. Hardware Description

2.2 Product Drafts (Old Models):

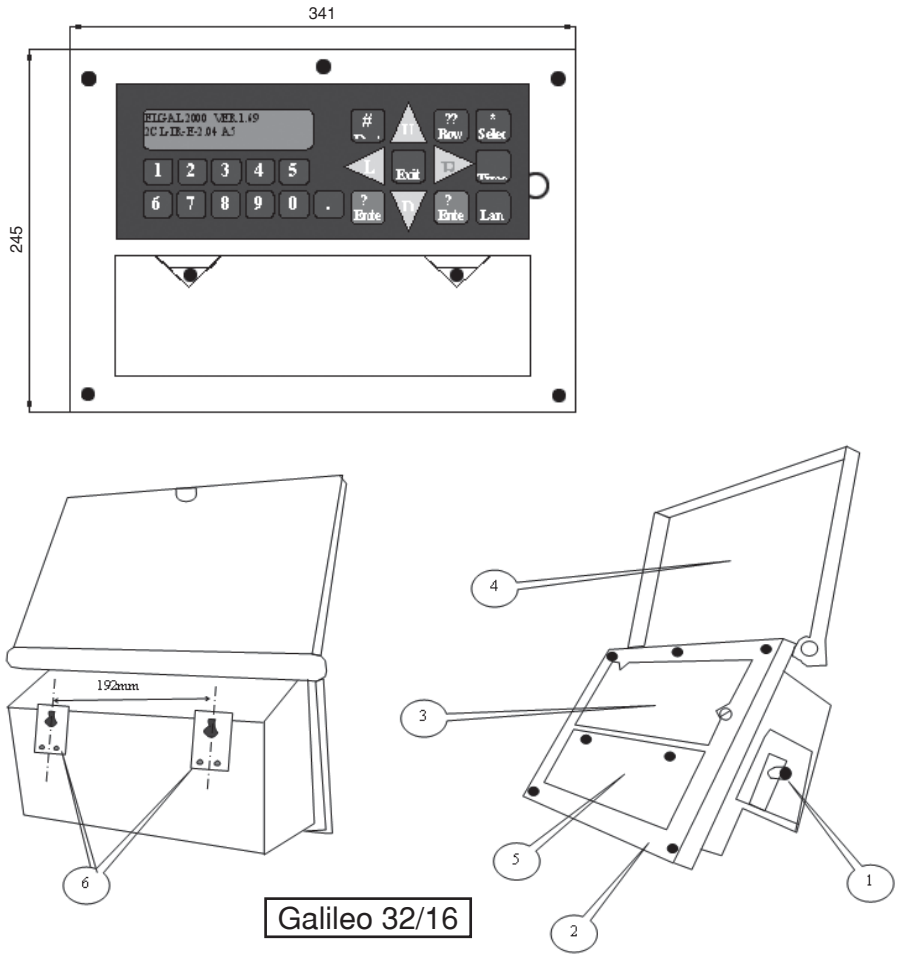

Galileo 32/16

1. Fuse 220V 0.5A 2AG (Elgal 12/24 only)
2. Casing cover
3. Keyboard and display
4. Top cover
5. Connections pad cover
6. Mounting clips

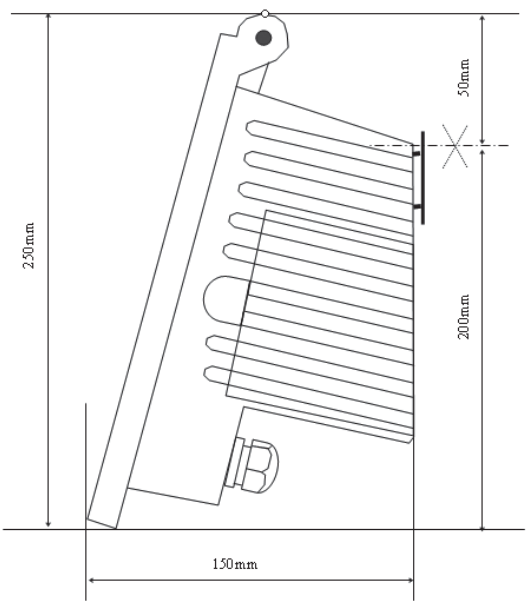

Galileo 32/16 enclosure – side view

Hardware Description .2

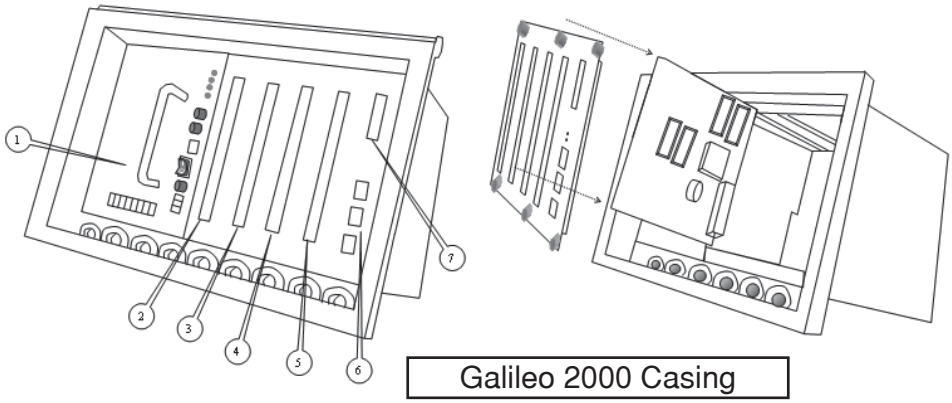

Galileo 2000 Casing

1. Power module (see Appendix 1)
2. Slot 1
3. Slot 2
4. Slot 3
5. Slot 4
6. Main card slot: communication ports.
7. Main card slot: Keyboard socket.

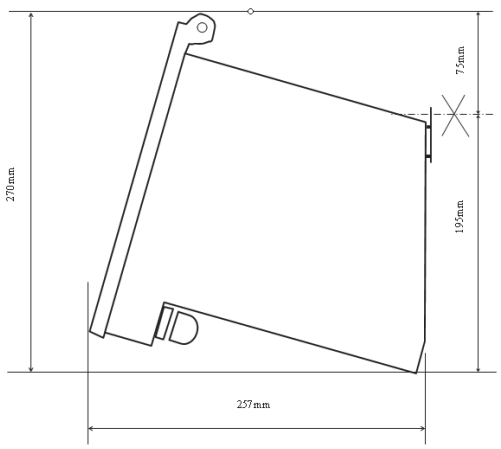

Galileo 2000 side view

Galileo 2000 (Standard)

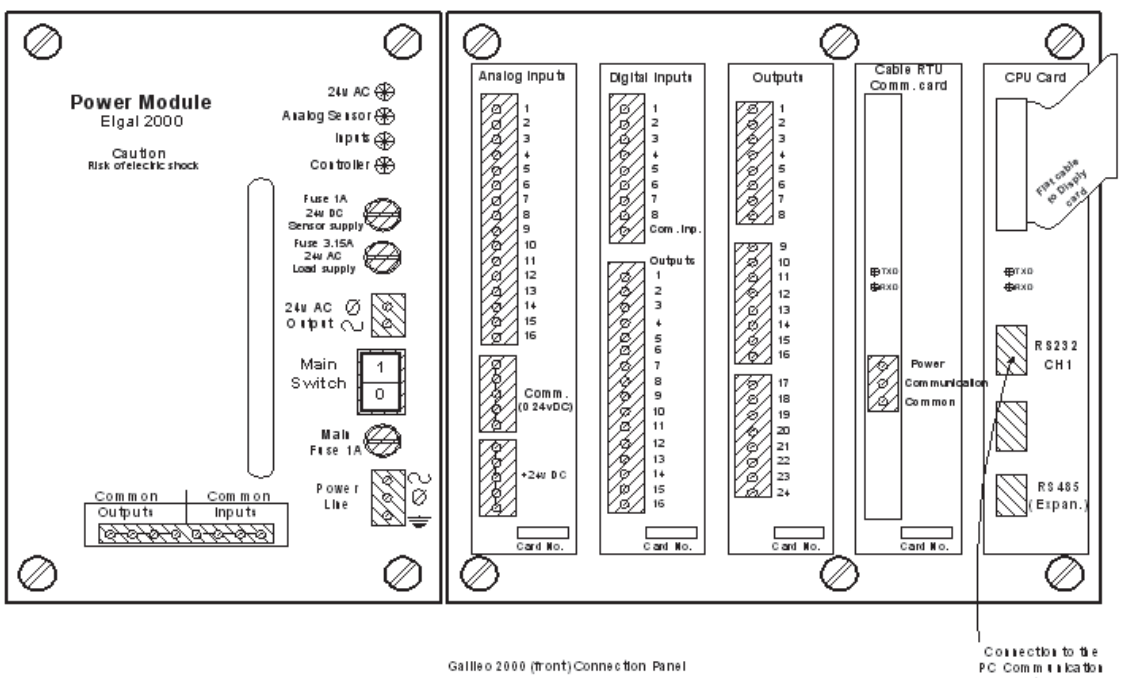

Galileo 2000 (front) Connection Panel

A2:3

2. Hardware Description

Galileo 32 board:

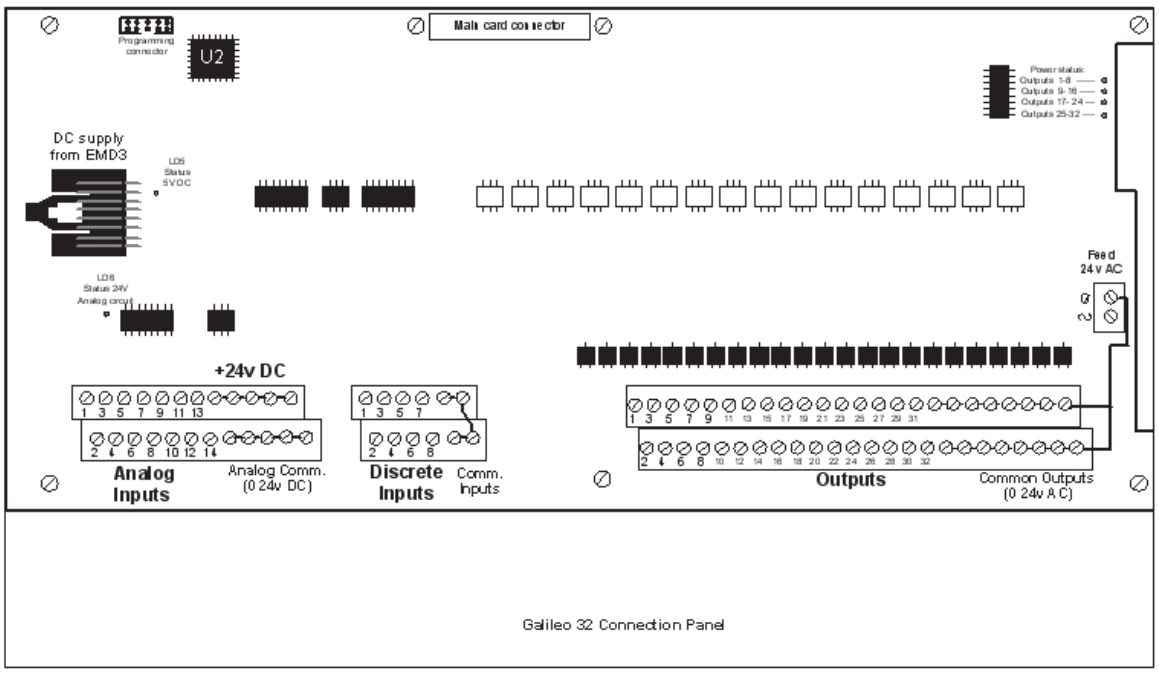

Galileo 32 Connection Panel

Key Boards And Displays .3

3.1 Galileo W Key-Board and Display:

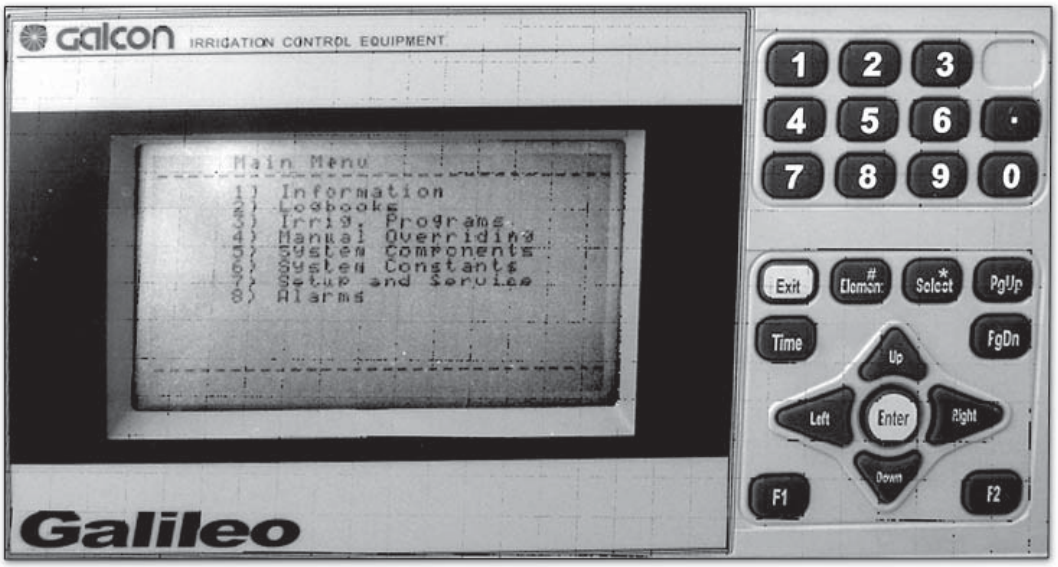

3.1.1 The display: The Galileo W models have wide displays with the following features:

3.1.1.1 12 rows – 30 characters each.

3.1.1.2 Head Row – Shows the name and location of the "Menu" screen. For example: "Irrigation Programming", 222. In Element Screen the name of the element and it's number appears followed by the symbol "#" and the top row number.

3.1.1.3 The working space: Shows the headers of the menu or the properties of the element. Each property is one row and includes a number, a name and the value for information or programming.

3.1.1.4 The bottom row is for special announcements such as "Save Last Changes * Yes/No" or "Locked Menu - Use System Secure".

3.1.2 Data Base: The construction of the data base is according to Elements. In order to access certain properties of an element you navigate through the different menus or access directly by the access code.

3.1.2.1 When the controller is turned on or when there is no click on the key board for 30 minutes the display changes into the "Start Menu" in which information and alarm messages of the system are shown.

3.1.2.2 In the case of more than 12 messages displayed the screen can be scrolled by using the arrows and the "PgUp" and "PgDn" keys

3.1.3 Navigation via the menus: Operation of the Galileo applications (Open Field, GreenHouse etc.) is described in the Program Operator's Manual. A sticker with the flow chart of the menu is located in the inside of the cover.
There are two ways to access the required screen:

3. Key Boards And Displays

3.1.3.1 At the start menu press Enter - you move into the “Main Menu”, you can move in the “Main Menu” by using the Up and Down arrow. If you press Enter while on top of one of the menu’s title you move into the next sub menu or into the first element of the chosen properties.

3.1.3.2 Each group of properties has a Screen Name and an Access Number. You can find the Access number on the flow chart sticker and in the operator’s manual. Typing the number (from the start menu or from the main menu will take you directly into the required Element Screen).

Once in the Element Screen (Information or Programming) paging is possible between the different elements. For example if the screen is “Irrigation Program Programming” and currently the program number is 5, in order to go to 6 press the right arrow (Next), in order to go to 4 press the left arrow (Prev). It is also possible to jump to a certain element: Press the key Element # and then the number of the element followed by Enter .

3.1.4 Example:

You want to change the Water Amount of Irrigation Program Number 5 in an Open Field Controller. One way is to type the access code 231 from the start menu and jump directly to step No. 5.
For the other method follow the next steps:

1. From the “Start Menu” press Enter to get to the “Main Menu”
2. At the “Main Menu” press Down twice to go to Irrigation Programs and then press Enter
3. At the Irrigation Programs press Down once to go to “Prog.Programming” and then press Enter .
4. At the Prog.Programming screen press Enter for the first item “Valves and Amounts”
5. At the “Valves and Amounts” Screen press Down 9 times to go to row no. 10: “Water Amount”. You can now change it and press Enter

   - In order to go one step back press Exit. After a change of any parameter the system sends a message upon pressing Exit (on the bottom row) “Save Last Changes” the default is Yes. If you want to exit without saving you must change the Yes to No – by pressing the * select key. After the selection please press Enter .
   - There are two types of variables in the controllers: Numeric and Alpha Numeric (When Alpha Numeric variable is presented the “*”symbol is attached to it). For Numeric variables the number is simply typed in. For Alpha Numeric variables the option is selected from a list. Press the “*

Key Boards And Displays .3

Select" key in order to choose from the list. The same key is also used in order to change the sign from "+" to "-".

- The Key F1 is used in order to return directly to the "Start Menu".
- The Time key is used to display the time and date at the top row.
- Every change of data must finish with appropriate Exit and saving of the data. Failing to save data for more then 30 minutes will result in a loss of data.

3.2 Galileo keyboard and LCD (Old Models)

(Liquid crystal display)

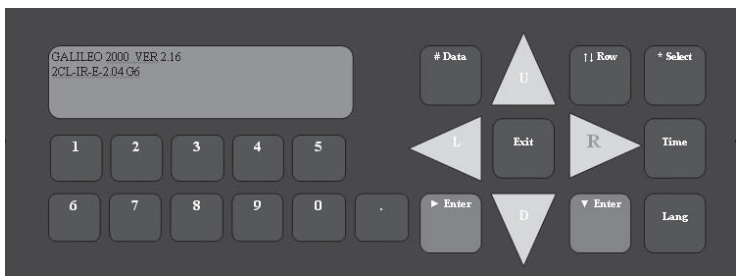

The display panel includes 2 rows, with 24 characters in each row. The top row displays the level of the current point. The number on the right is a navigation aid: it indicates the item number. This number increases as lower menu levels are navigated. Upon entering a table area, a # appears on the right side of that row, and the digit alongside it is the column number.

The bottom row displays actual information, and in programming areas, the display presents the parameter header on the left and the value on the right.

If the keypad is left untouched for 30 minutes, the system automatically exits the Application menu to the Start Menu. At the Start Menu, general information is displayed in a scrolling menu. Displayed here are messages pertaining to applications that are operated by the controller: whether or not they are active, and if there is an Alarm in the system. Irrigation systems display information about which valve is currently irrigating. Use the ▲ and ▼ keys to scroll and view all the messages.

The Application menu flow chart is described in the Application Manual and on the internal side of the controller cover. To enter the menu, press the <Enter> key or the menu's item number. Once the menu is displayed, navigate up or down using the arrows and press Enter to select the desired item. Another method is to continue clicking the numbers on the flow chart next to the point you wish to reach.

For **example**:

Your project is "Open Field" controls (2.82).

You wish to change the amount of Irrigation Program No. 5.

You may:

a. From the Start Menu, press keys 321. you will enter directly to "Valves and Amounts table Program No. 1.
b. Press 5 times <Arrow Down> in order to go to Program No. 5
c. Press 9 times <Arrow Left> in order to go to "Water Amount".
d. Change the water amount by typing the required number and press <Enter>

3. Key Boards And Displays

e. Press <Exit> In order to move one step back.
f. You'll be prompted with a question "Are you sure?" the default is "Yes". If you want to change it press <* Select>. After the selection press <Enter> then you'll move out.

Select key: For many of the parameters, you cannot key in numbers, rather a list is displayed from which an option must be selected. For example: Yes or No questions such as 'Is the system active?' 'Select type of fertilizer or pump,' etc.

Dual Enter keys: The Enter key acts like Enter + Next. It automatically moves on to the next parameter. When setting values in a table, you can either move to the next parameter in the same item (row) or remain on the same parameter - but move to the next item. Example: you are in Valve programming and you wish to change the water quantity in program 1. Press the Enter▶ key to navigate to the fertilizer Program link for program 1. If you press the Enter▼ key, you will move to the water quantity of program 2.

Data# and Row↑↓ Keys: Inside of a table, you can navigate freely to another point in the table using the Row↑↓ key. This key is very useful and may save you a lot of time. For example, you are at the top of the table (program 1, Valve number) and you wish to enter a new value in the water quantity of program 25. Pressing Row↑↓ 25 Enter▶ Data# 7 Enter▶ will take you to that exact location.

Time key: displays the date and time on the top line of the LCD. Press it again to hide the time and display the relevant information.

Lang key: is not applicable for Galileo controllers.

Exit key: takes you one level up in the menu. If you are in a programming area, and have changed a value for one or more parameters, you will be asked whether you wish to "save the last changes" you made. "Yes" is the default choice. If you wish to save settings, just press either Enter keys to confirm. If you don't want to save - press the Select* key to change to "No" and then press Enter.

Once you have pressed any number key to change a parameter, the display changes to Edit mode. You will see the cursor flashing under one of the digits. This is the digit that will change when entering a number. In Edit mode, you can type in numbers, using the ▶ and ◀ keys to move between digits, or using a decimal point to convert to fractions. To end and accept settings, press either Enter keys. To exit Edit mode without saving settings, press Exit once.

All changes made in a Programming menu are saved in temporary memory, and will remain there until you Exit and save them in the non-volatile memory. If you do not save changes made, the system will continue displaying the current menu for 5 minutes after your final click - and at the end of 30 minutes your changes will be lost.

Terminology .4

Upon entering the world of computerized control, there are several widely used terms with which you may not be familiar. The following is a mini control glossary:

Input: **1.** (In general) Any information that is fed into a computerized device.

2. A point on the controller where information gathered from the surroundings is connected.

3. (Discrete/Digital) input – An input capable of reading two different positions: a closed contact and an open contact.

4. (Analog) input - An input that reads a value of electric current, voltage, resistance or frequency, in a pre-defined range. An electric value represents the real units read by the sensor, which the control software interprets and act on. Sometimes this input is referred to in short as **Sensors.**

Output: **1.** (In general) the "production" of a computerized device.

2. The point on the controller where the operated device must be connected.

3. (Relay) Output – the controller's internal closing contact between 2 points.

N.O: Normally open – refers to the status of an Output when the program is idle to it. N.O. output will be in opened contact (no contact) in the case of relay, or not powered in the case of Triac output.

N.C: Normally closed – refers to the status of an Output when the program is idle to it. N.C. output will be in closed contact (no contact) in case of relay, or powered in the case of Triac output.

PLC: **1.** Programmable Logic Controller – an electronic machine designed to run a program and operate external machines in accordance with the program.

2. Hereby: The program that operates the controller.

Parameter: a cell (location) in the controller's memory allocated for the use of a particular user setting.

Set: **1.** Define a value for a parameter.

2. (Output) Turn an output to ON position. Activate an output.

3. (Timer) Cause the timer to start counting

Reset: **1.** Initialize a parameter. Setting a zero value for the parameter.

2. (Output) Turn an output to OFF position. Deactivate an output.

3. (Timer) terminate the timer's counting.

4. Terminology

Set-point: A user value set for a parameter in order to set the activation point of a function or device

Application: A program that is loaded onto the controller, enabling it to control a specific type of project, such as: a greenhouse, irrigation system, nursery, etc. also called a “Project”

System: A single instance of an application (one greenhouse, one irrigation head). One controller may control up to 5 systems. A PC with an application installed onto it may be used to connect to many systems of this type.

Defining Controller Number, Communication and I/O cards .5

5.1 Communication Definitions:

Your controller first needs to be assigned an identification number and a network baud rate to make it capable of operating in a network. This task can be made only at the controller keyboard and not from the PC.

Text in controller	Description	GH Controller	OF Controller	Default value
Controller No.	Assign a separate number to each controller in the network and this will be the number that this controller will respond to when called upon by the PC center application.	752 #1	7211 #1	
Comm.. baud rate *	Use the Select key to select the communication speed. All the controllers sharing the same PC comm. port must operate at the same speed.	752 #2	7211 #2	9600
Comm.. method *	Use the Select key to select the communication method: Direct for all types of linear communication, or modem for modem communication. The modem must receive an initiation string (AT command) whenever it is restarted following a power shut-down.	752 #3	7211 #3	0

5.2 Defining I/O cards (Access # 753 for Green Houses; 722 for Open Field)

When the program attempts to operate an output, or when an input senses an event, the address of the output is interpreted by the operating system (the level below the PLC) and directed to the correct point. For modular controllers, we must inform the controller of its modules to set its memory map.

5. Defining Controller Number, Communication and I/O cards

Use the Select key to define the correct card for each slot. Work with the vertical Enter▼ key to scan all 16 logical slots. Note that empty slots must be defined as NONE. Other options are:

8IN16O	I/O 8 inputs and 16 outputs card (C2000-4, C2000-12)
24Out	24 outputs card (C2000-10)
24In	Not applicable – do not use this definition.
16Analo	16 analog inputs 4-20mA (C2000-5)
Analog2	Not applicable – do not use this definition.
Analog0	Not applicable – do not use this definition.
Alarm	Not applicable – do not use this definition.
WireRtu	Single cable RTU adapter (C2000-15, 2000-16)
RadioRtu	Adapter card for AP radio transmitter (C2000-14) see appendix B.

Outputs and discrete inputs setup .6

Long before purchasing your Galileo controller, you sat down with one of our representatives and designed your project. You decided which components will ultimately be operated by the controller, and calculated which input items are required in order to obtain the most accurate functionality. In actuality, **you have designed your project** and decided what controller and what I/O modules to buy in order to meet your needs.

The control system will be the last part to be installed in the project. Everything else will be in place when you install the controller: valves, pumps, and all greenhouse components connected to an electric board. Whoever connects these components to the controller's outputs, whether it is you or an authorized technician, will naturally follow a certain sequence. The exact sequence will be left up to you (you should consult your technician). A typical example:

The project is a ½ hectare greenhouse.

Irrigation components:

Main pump
4 irrigation valves
Main valve
4 fertilizer injectors
Main fertilizer valve
Total irrigation outputs: 11

Climate components:

4 side windows (8 outputs)
One roof window (2 outputs)
Shading/Thermal screen (2 outputs)
4 fan groups
Heating device_____
Total climate outputs: 17

General components:

Alarm device

Total project: 29 outputs.

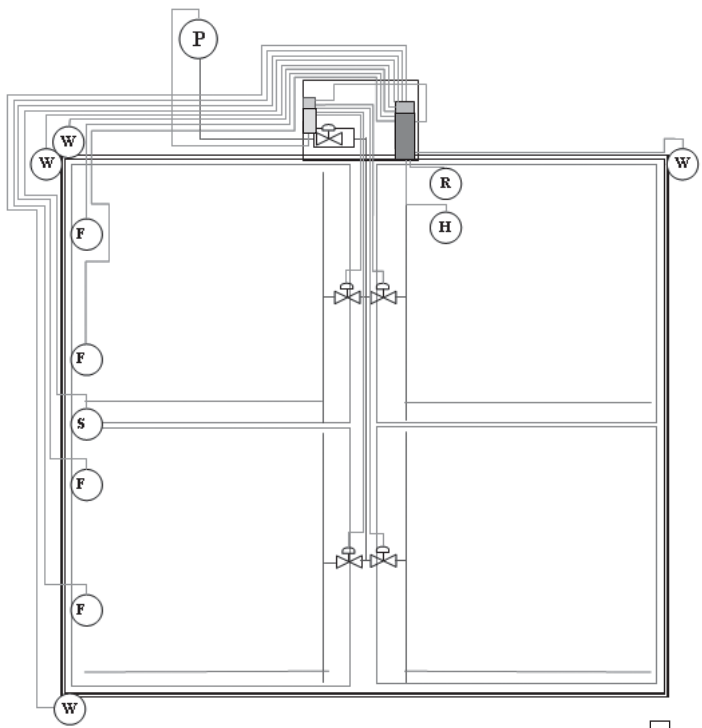

Controller's terminal box Electric cabin
Multi core control cable

A project like this requires Galileo 2000/W + one card with 24 outputs. This controller provides 40 outputs. We recommend dividing them into irrigation and climate segments, leaving some spare for future use in both segments. This of course, is just a recommendation. Your controller will perform at whatever settings you decide upon.

General irrigation components + alarm device	1-10
Irrigation valves	11-20
Greenhouse A	21-40
(Possible future Greenhouse B may use the same controller, but will require an additional card)	

This chapter is about "teaching" the controller how to carry out the program's commands. We have created an internal connection table between the components (application's property) and the real physical outputs (Controller's property). The process is slightly different for each project (i.e. Greenhouse, Open Field, Etc.) although the principle is the same.

6. Outputs and discrete inputs setup

Step 1: Identifying the output/input number.

This is a simple task using the Galileo 16/32. All the I/O connecting points are ordered from left to right and marked on the printed circuit board.

With the Galileo 2000, it is a bit more complicated. The controller counts the address according to the slot's definition. Therefore, if slot #1 is defined as a 16Analog(C2000-5) card – the controller does not expect to find any outputs there, and will direct a command for output 1 to be the first output of the first slot that is defined either as 8in16out(C2000-4) or 24out (C2000-10).

> Advice for PC Center users: during all I/O definition, you may open (from top menu) "Settings" > "Controller setup" > "System screens."This screen will provide you quick and convenient access to all relevant screens.

The definition of the card in the slot also determines the amount of expected inputs/ outputs in it. If the first I/O card is C2000-5, only the first 16 outputs will be directed to it. Beginning with output 17, the controller will search for the first point on the next I/O card.

In the open field program, you must inform the system whether the output is local on the controller board, or on a wire or radio RTU.

Step 2: Register your project in the tables in the controller's "ID Book".

Pages number 4, 5, 6 and 7 in the ID book are tables made exactly for this purpose. This is a very important stage in the process of the installation. In case of a failure – this registration will make the difference between a simple act of reinitiation and the need to reinstall the project. The tables provide 2 pages for outputs, one page for discrete inputs, and one page for Analog inputs. Pages 4-5 are suitable for all local outputs. Pages 6-8 are suitable for RTU outputs. Page 9 is for local discrete inputs and page 10 is for RTU inputs. Page 11 is for Local Analog inputs and page 12 is for RTU Analog inputs. These pages will satisfy the documentation needs of 98% of the controllers. In some rare cases there might be a shortage of lines on the given sheet – in such cases you will have to do a carbon-copy and modify the number or make your own PC registration file.

# Output	system (IR, A, B, C, D)	Definition	Factory set for irrigation machines
1			Main irrigation valve
2			Water pump (source)
3			Alarm
4			Fertilizer pump 1
5			Fertilizer pump 2
6			Fertilizer pump 3
7			Mixer tank filling valve
8			Mixer booster pump
9			Main misting valve
10			Drainage pump
11			
12			
13			

Connecting I/O in a controller with an Open-Field software:

Open field irrigation differs from Greenhouse sites by frequent use of remote connection means like Single Cable RTU and Radio RTU (Remote Terminal Unit). These units are typically addressed by a certain code that must be set on the unit's hardware. Several units will share the same communication channel and the central unit will address them by their

Outputs and discrete inputs setup .6

own identification number. Each RTU will normally have more then one I/O element of each kind, and at times – more then one kind of element (Inputs, Outputs, Sensors).
The reference to an I/O element as far as the controller's software is concerned, is a kind of coordination table. It can be described as: **Valve number n = output number X in unit number Y in channel type Z.**
In the controller's I/O connection table, **Z** is represented as a prefix digit, A dot as a divider, and a four digit number. When the output is local – the prefix will remain Zero and the suffix is just the same as described above – a serial number according to the I/O modules of the controller. When the output is operated via one of the RTU types – you should use the prefix 1 or 2 as explained above, the 3 digits on the right of the dot will be a decimal value of the binary code of the unit where the component is installed, and the rightmost digit will be the number of the output in the RTU.

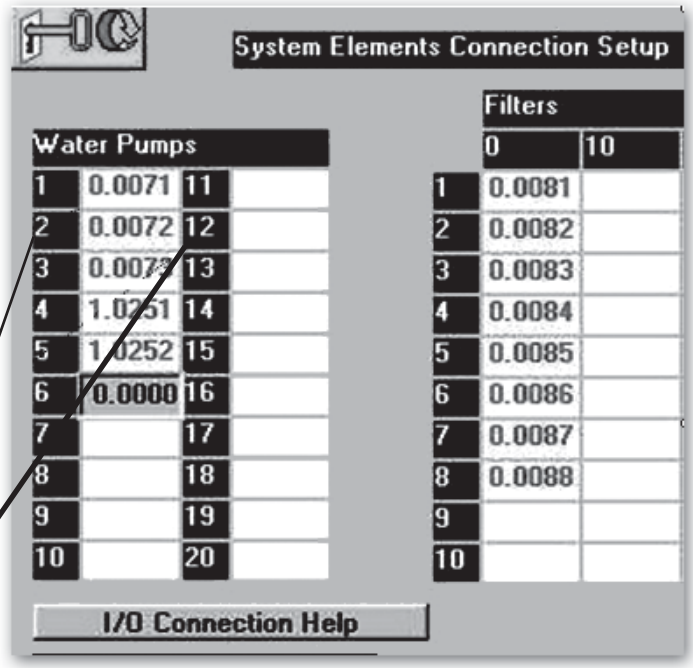

Cannel type:
0 = Local
1 = Single cable RTU
2 = Radio RTU

1.0251

In case of RTU (if prefix either 1 or 2) – the PIN code (decimal) of the RTU where the device connected.

The output number within the RTU. **Valid values: 1 and 2 only**

In case of local connection (if prefix is 0) – the serial number of the output is sequential.

Note: Before applying any RTU layout – **please read the appropriate chapter in this manual** particularly noting the paragraph dealing with skipping codes when using CRTU 4-8-4

Technician code

Controllers used with operating system 2.17 or higher have a blocking code to protect the definition segments from unauthorized modification. Access the key through menu <74> and type 0007 Enter▸.

The entire menu is opened until relocked (same address) 0000 Enter▸ or after leaving the keyboard untouched for 30 minutes.

6. Outputs and discrete inputs setup

Encountered address

The encountered address should not trouble the every day user. You have just defined an I/O address to existing elements, and from now on you will only have to refer to those elements from within their programming and setup tables. However, in troubleshooting steps you often need to examine an I/O element via its encountered address in order to eliminate the possibility of program setting error. The place to view or modify the I/O element status is in address <611, 612> in Greenhouse controller, and <711> in an Open Field controller (see chapter 6).

The encountered address is the same as the I/O address as long as there are no RTU adapters in the controller. But when RTU adapter comes in – the controller's operating system allocate space in this table for the whole spectrum of logical I/O possible in that adapter. Example:

Slot number	Card type	Inputs from – to	Outputs from - to	Sensors from - to
1	C2000-4	1-8	1 - 16	0 - 0
2	C2000-5	-	-	1 – 16
3	C2000-10	-	17 - 40	-
4	C2000-15	9 – 264	41 – 168	17 – 144
5	C2000-4	265 – 273	169 – 184	-

To avoid confusion and endless calculations – the Open Field program provides you with navigation tables where you can type the I/O Address and the system will place the encountered address and its status (See Open field Manual).

Sensors connection .7

All 4-20mA sensors have electronic adapters to convert the original value received from the probe into the “I” value. Sensors may be categorized into three different types:

Passive sensors: The sensor’s circuit receives its operational power from the controller, using the value-transmitting core as the negative pole. (PT100, KTY, Electronic Humidity sensor)

Semi-active sensors: The sensor’s circuit receives its operational power from the controller in both the positive and negative (common) cores. The third core is used only for value transmitting. (Meteorology station, Mixer level sensor, etc.)

Active sensors: The sensor’s circuit has its own power source. It transmits the value in one core and uses the second core connected to controller’s common pole for reference. (EC pH, CO_2)

Sensor wiring

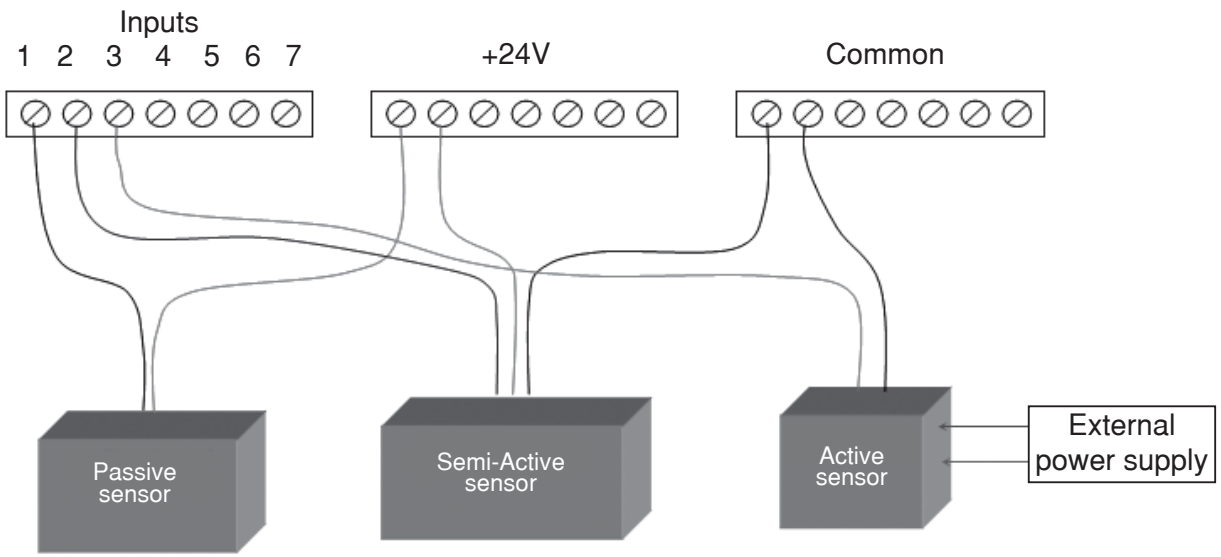

7. Sensors connection

Sensor Connection: Sensor connections in the applications' manuals.

Sensors connection logical diagram

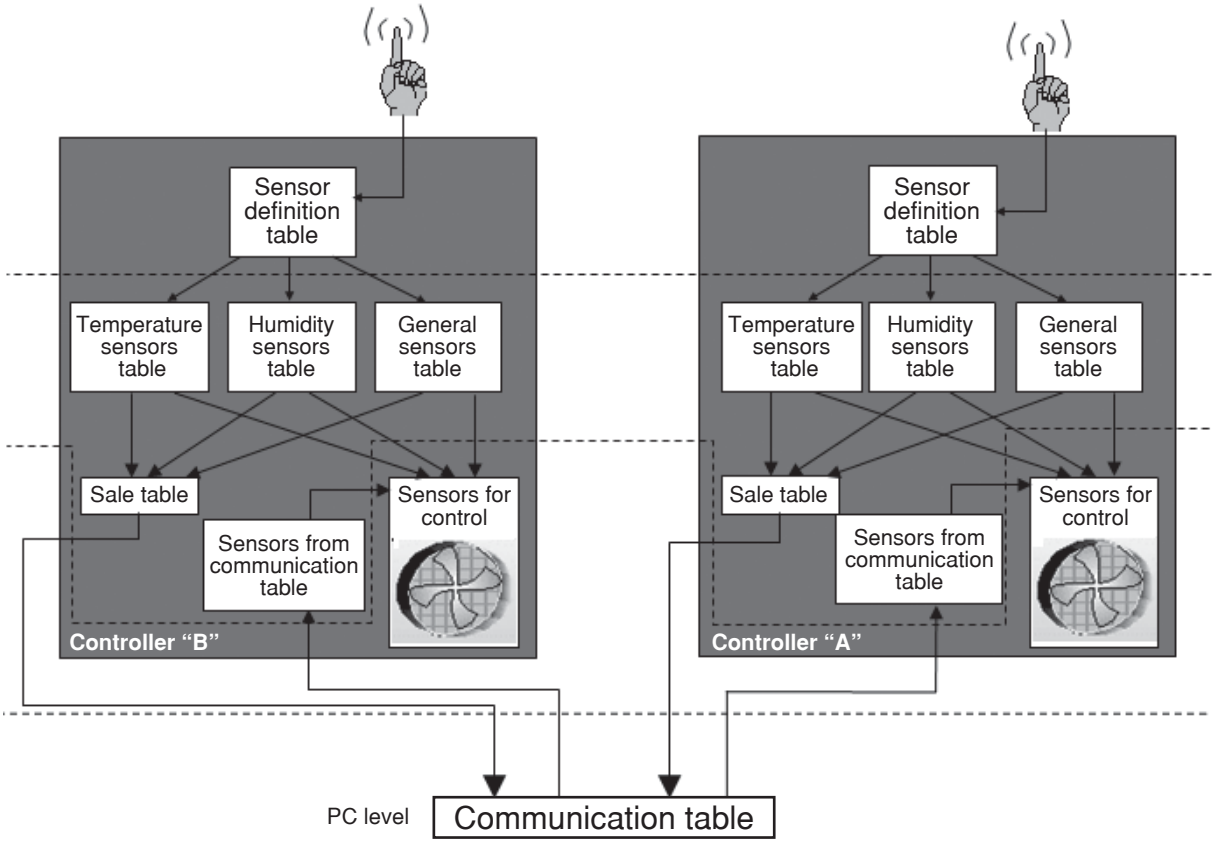

Sensors connection .7

Common ES sensors definition set

Sensor description	Read units	Type definition	Minimum value	Maximum value	Max. alarm value	Min alarm value
Temperature PT100 jumper set opt. 3	ºC	4-20mA	0	2110	-100	2500
Temperature PT100 jumper set opt. 4	ºC	4-20mA	-1000	1040	-1200	1200
Temperature PT100 default jumper set	ºF	4-20mA	-580	1240	-600	-1400
Temperature PT100 jumper set opt. 2	ºF	4-20mA	320	2190	100	2400
Temperature PT100 jumper set opt. 3	ºF	4-20mA	320	4120	100	4400
Temperature PT100 jumper set opt. 4	ºF	4-20mA	-1480	2190	-1900	2400
Humidity wet PT100 default jumper set	%RH	Wet 4-20	Same as reference sensor			
Humidity wet PT100 jumper set opt. 2	%RH	Wet 4-20				
Humidity wet PT100 jumper set opt.3	%RH	Wet 4-20				
Humidity wet PT100 jumper set opt.3	%RH	Wet 4-20				
Temperature KTY	ºC	4-20mA	-100	500	-200	600
Temperature KTY	ºF	4-20mA				
Humidity KTY	%RH	Wet 4-20	Same as reference sensor			
Electronic Humidity sensor	%RH	4-20mA	0	1000	100	1100
Galcon's EC by EC-pH3050 unit	µMOHAM	4-20mA	0	1000	-100	1200
Galcon's pH by EC-pH3050 unit	pH	4-20mA	0	1300	100	1500
Quantum Solar radiation 400-700nM	PAR	4-20mA	0	2000	-100	3000
Quantum Solar radiation 400-700nM	Lux * 100	4-20mA	0	1080	-100	1300
Global radiation sensor (Keep & Zonen)	W/M^2	4-20mA	0	1000	-100	1500
Wind speed (Velocity)	Km/h	4-20mA	0	160	-20	200
Wind speed (velocity)	Mph	4-20mA	0	100	-20	150
Wind direction	Degree	4-20mA	1	360	-10	400
Tensiometer 0-100 cbar (Mottes)	cbar	4-20mA	100	0	-999	999
Chicken scales	gr	4-20mA	0	20,000	-200	25,000

8. Utilities and final preparations

The utilities menu is a set of commands and views that help to maintain and troubleshoot the system. It is very rarely used by the end-user. However, whenever a problem arises, it is the first spot you will want to explore to discover whether the problem is in the hardware or the user's commands. Let's go through all the sub-menus to find out which information and actions are located there:

Code	Explanation
71111 - 16 I/O status	You will see 2 rows of scores or asterisks. The top row displays the outputs status and the bottom row displays the discrete input status. Notice that the cursor is blinking on the "O" sign on top. Both rows are bounded by numbers on both sides. The numbers are the first and the last displayed input/output. Outputs: an * indicates that the output is currently powered by the program. A score indicates that the output is not powered. Inputs: an * indicates a closed contact of the connected switch. A score indicates an open contact. If you wish to inspect outputs beyond the first 16, use the R▷ arrow. You will see the boundaries changing for every set of 4. If you wish to inspect discrete inputs beyond the first 16, first use the D arrow so that the "I" will blink instead of the "O", and then use the R▷ arrow. How is it used? In case something is not working when it is supposed to find out the engaged output and check if it is on. If it is – keep looking towards the hardware side (check ~24V on the output…) if it isn't, take a second look at the program you have entered. O 1--*---------*---16 O I 1*-----*---------16 I
71112 - Outputs status	The same as 611, but here you can see each output individually. Use the Row key and the output number to move to that output you wish to view. The status will be displayed as "ON" or "OFF." **Special method!** If the controller is defined as "NOT ACTIVE" (code 511) you may use the Select key to change the status of an output. This feature is used to test your connections. The output will return to program control the moment you re-activate the controller.
61113 - Input status	The same as 611, but here you can see each input individually. Use the Row key and the output number to move to the input you wish to view. The status will be displayed as "ON" or "OFF."
6112 - Sensor status	To view the sensor values at the operating system's level (before it isregistered in the tables). The values will be in accordance with what you have defined,you see are according to your definition you made, without decimal points. A sensor that was not defined will display a value of –32767. A sensor that exceeds its alarm value will show –99999. Here you can view the controller's reading in the shortest amount of time. Use this when calibrating your sensors.

Utilities and final preparations .8

Final preparations

Once you have made all of the connections, ascertained that everything is connected and defined accordingly, you may now activate the controller. Activating the controller also makes it possible to activate its systems (irrigation, greenhouse). If you haven't programmed them yet – make sure that each one of them is defined as "Not active" otherwise things may begin to move about, and irrigation programs will start immediately.

Appendix 1: Cable Remote Terminal Units (CRTU)

Control System for Remote Devices Via a Single Three-wire Cable

General Description

Galileo Controllers, with the addition of RTU (Remote Terminal Unit) adapter, enables users to control a system of remote terminal units that are interconnected via a single three-wire cable. The C2000-15 adapter is a standard module inserted into one of the controller slots and then defined accordingly. This adapter uses 2 wires to supply the power required to operate the remote units, and the third wire is used for two-way communication. Communication also utilizes the - wire (-) as reference for the signals.

The cable remote unit (appears in illustrations as RTU) is intended, first and foremost, for operating hydraulic valves, but also for reading inputs, such as water meters, fertilizer meters and pressure stats. Outputs are operated using the pulse (latching) method, and they can be used to operate other devices in addition to irrigation valves, such as fertilizer devices, pumps, main Valves, etc., all according to controller definitions.

Following are the types of existing remote units:

Product Name	Outputs	Discrete Inputs	Analog Inputs	P/N
CRTU 2-2	2	2	None	AMRC0F02
CRTU 4-8-4	4	8	4	AMRC0F04

This type of cable, which is laid over long distances, is by its very nature a source for numerous types of electromagnetic interference, such as lightning and static electricity. Therefore, in the product itself and in the order of installation, special attention is paid to grounding and lightning protection devices. A protection device of the controller's adapter card is a separate device that is called LP1, and is installed next to the controller. This device must be well grounded.

Block diagram of the linear remote unit system:

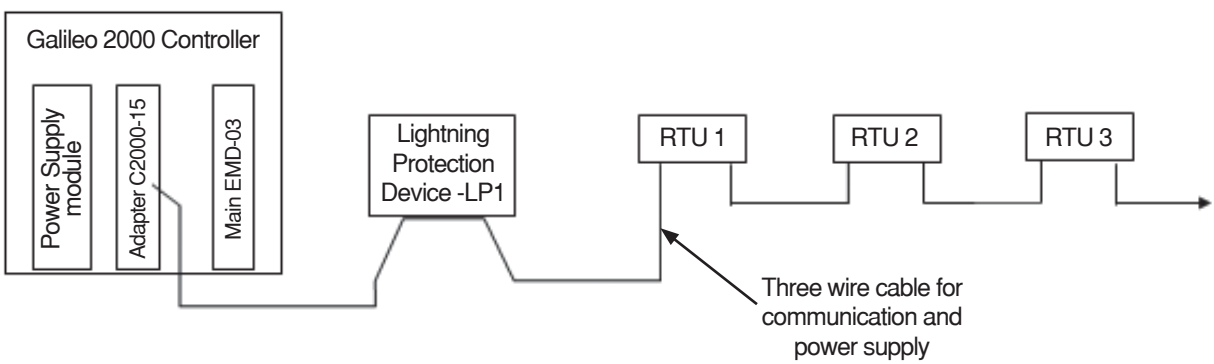

The system is operated by a 24 V direct current (DC). The maximum output that a single adapter card can tolerate is 20 Watt. Each unit, when it is inactive, consumes 0.02 Watt (without analog inputs). Activation of an output, whether for closing or opening, causes discharging of the capacitor, which is later recharged for 10 seconds. When the capacitor is charged, the capacity of the unit increases to approximately 1 Watt. Each remote unit

Appendix 1: Cable Remote Terminal Units (CRTU)

includes a set of switches that encodes the unit's number in binary numeration. Each unit must have an independent, unique number that does not appear in any other unit. RTU 4-8-4 type units are identified as a double unit, and sequential binary encoding is not used. The maximum number of remote units that can be connected to one line is 64 units. The maximum length of a line is 5 Km., depending on the number of units and load on these units. The cables used should be ones intended for underground installation according to cable manufacturer instructions (such as NYY). The conductor intersects from 1 square meter to 3 square meters, according to the cable length and load. We recommend that you consult with Galcon's Application Engineering department to calculate conductor loads and diameters for each specific project.

Remarks:

- The length of the unprotected cable between the controller and the protection device (LP1) should be no longer than 1 meter.
- Apply ground connection to the LP1 device, rated no greater than 4Ω.
- In cases of underground connection with cables, standard epoxy insulation sleeves should be used.

Defining the Unit ID:

Each unit identification number is set by creating a binary number based on allocating switches 1-6 to ON=1 and OFF=0 positions. For your convenience, the following is an auxiliary table for binary numeration:

RTU Number	DIP_SW state						RTU Number	DIP_SW state						RTU Number	DIP_SW state					
	6	5	4	3	2	1		6	5	4	3	2	1		6	5	4	3	2	1
1	0	0	0	0	0	1	23	0	1	0	1	1	1	45	1	0	1	1	0	1
2	0	0	0	0	1	0	24	0	1	1	0	0	0	46	1	0	1	1	1	0
3	0	0	0	0	1	1	25	0	1	1	0	0	1	47	1	0	1	1	1	1
4	0	0	0	1	0	0	26	0	1	1	0	1	0	48	1	1	0	0	0	0
5	0	0	0	1	0	1	27	0	1	1	0	1	1	49	1	1	0	0	0	1
6	0	0	0	1	1	0	28	0	1	1	1	0	0	50	1	1	0	0	1	0
7	0	0	0	1	1	1	29	0	1	1	1	0	1	51	1	1	0	0	1	1
8	0	0	1	0	0	0	30	0	1	1	1	1	0	52	1	1	0	1	0	0
9	0	0	1	0	0	1	31	0	1	1	1	1	1	53	1	1	0	1	0	1
10	0	0	1	0	1	0	32	1	0	0	0	0	0	54	1	1	0	1	1	0
11	0	0	1	0	1	1	33	1	0	0	0	0	1	55	1	1	0	1	1	1
12	0	0	1	1	0	0	34	1	0	0	0	1	0	56	1	1	1	0	0	0
13	0	0	1	1	0	1	35	1	0	0	0	1	1	57	1	1	1	0	0	1
14	0	0	1	1	1	0	36	1	0	0	1	0	0	58	1	1	1	0	1	0
15	0	0	1	1	1	1	37	1	0	0	1	0	1	59	1	1	1	0	1	1
16	0	1	0	0	0	0	38	1	0	0	1	1	0	60	1	1	1	1	0	0

Appendix 1: Cable Remote Terminal Units (CRTU)

17	0	1	0	0	0	1	39	1	0	0	1	1	1	61	1	1	1	1	0	1
18	0	1	0	0	1	0	40	1	0	1	0	0	0	62	1	1	1	1	1	0
19	0	1	0	0	1	1	41	1	0	1	0	0	1	63	1	1	1	1	1	1
20	0	1	0	1	0	0	42	1	0	1	0	1	0	64	0	0	0	0	0	0
21	0	1	0	1	0	1	43	1	0	1	0	1	1							
22	0	1	0	1	1	0	44	1	0	1	1	0	0							

Important Note: 4-8-4 type remote units are actually 2 consecutive units on one card! When defining a line, one binary switch must be left unused after each one of these types of units! For instance: a unit that is defined as 10 (001010) will also include unit 11 (001011), and therefore the next unit should be defined as 12 (001100).

Connecting the Cable to its Remote Units

When purchasing the cable, you must ensure that each wire is of a different color. It is very important to maintain the continuity of insulation colors. The colors displayed in the illustrations in this chapter are colors that are used extensively throughout the world. In cables with different colors, it is important to note the letters. Crossing of wires may cause damage to the adapter card. The controller should be turned off before any wiring activity is performed on the remote units, and electrical power should not be renewed until you have checked that the connection is correct. Following is the legend for the letters:

S- Power Source
C- Communication
G- Common

The logical format of the remote units line is parallel as followins

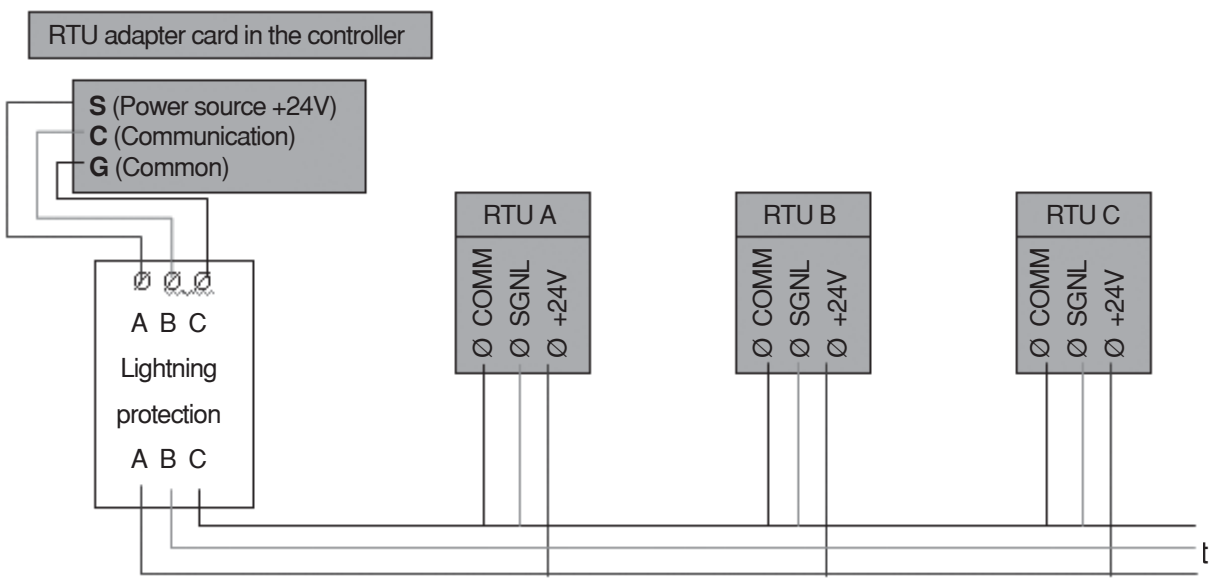

Appendix 1: Cable Remote Terminal Units (CRTU)

an RTU's connector actually disconnects the whole line downwards.

Discrete Inputs

Any component that closes/opens a dry contact can be used in discrete inputs. (For example: water meters, fertilizer meters, pump fault contacts, etc.). The maximum measuring rate is 500mS (250mS ON, 250mS OFF). When the communication rate to the controller is slower than the pulse rate, the remote unit sums up all the pulses from one communication to the next communication, measures the time between the last two pulses and transfers the data after processing to the controller, so that the line's communication rate and load do not effect the accuracy of measurement readings.

Analog Inputs

Sensors such as tension meters, anamometers or thermometers can only be connected to RTU 4-8-4 type remote units. The preferred standard is 0-10V, and care should be taken to maintain low power consumption, for the reasons specified above. By changing the J1-J4 switch, the card can also read sensors of 4-20mA standard, but for these sensors, power consumption is set by the values measured and their effect on the entire line is significant. Connection of 4-20mA sensors will severely limit the maximum number of units in the line, and in any case, no more than 8 sensors of this type can be connected to a line, unless they are fed by an external power source.

Discrete Outputs

The discrete outputs were designed for operating latch solenoids and latch (pulse) type relays with 3 wires. The voltage is 12V DC and the pulse length is 50-80 mS. These solenoids are in fact transducers that transform the pulse into a hydraulic command that open and close valves. Latch relays translate the pulse into an elctric dry contact.

Adapter card

for Coordinating the Remote Unit with the Galileo Controller - C2000-15

The adapter card for linear remote units is a card that is inserted into one of the module slots in the Galileo 2000 controller, and is accordingly defined as WireRTU. This card includes a connector that is suitable for 3 wires, from which the cable goes out to the units. Above the connector are two led lights that indicate the communication status. The upper led lights up during communication and the lower led lights up during reception of input. The communication rate on the three-wire line is 256 bps. Remote units whose inputs are defined as connected to any device receive more attention and are scanned at a higher rate than those that do not have connected inputs.

Remark: Up to two C2000-15 cards can be installed in the Galileo 2000 controller. The definition of the remote units begins with 1 in each line. CRTU adapter No. 2 (From the left in the old models or from the top in the W model) will have the RTU number 65-128. e.g definition of RTU no. 1 = no.65 for the controller and 64 = 128.

It should be noted that numerous RTUs create a heavy load on the controller's processor.

Appendix 1: Cable Remote Terminal Units (CRTU)

Infrastructure

It is commonly accepted that rodents are active at up to a depth of 100-120 cm below the ground surface. Therefore, cables should be laid beneath this depth, or alternatively, a cable can be laid inside a pipe that is resistant to rodents. All the surface cables should be protected by sleeves of 50 mm pipes.

In most cases, the cable is laid alongside the water pipe, in the same conduit. In this case there is a certain advantage that the cable has the same sand padding that envelops the water pipe. Yet it should be taken into consideration that water pipes by their very nature tend to burst from time to time, and then it is likely that during the digging required to repair the pipe the cable may be damaged, and you should be equipped with a suitable stock of material to repair the cable. At least 150 cm. of surplus cable should be left at each connection.

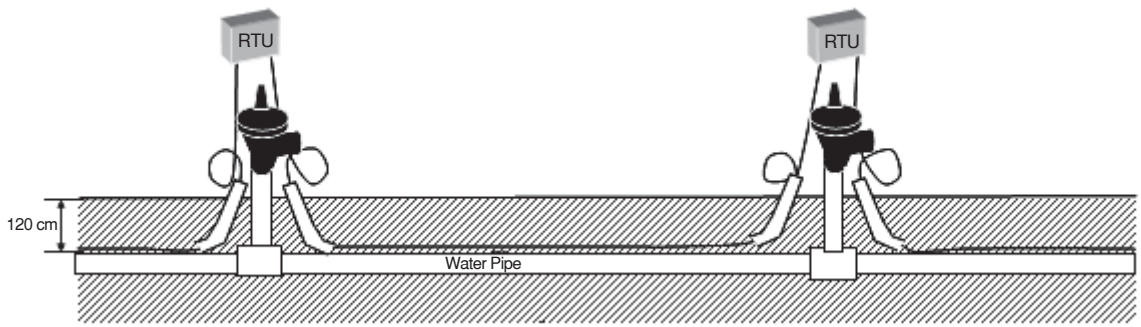

Lightning Protection for three-wire Cable (LP1)

Lightning protection LP1 will be installed adjacent to the controller, and will serve two objectives: the cable that continues outside is often rigid and wide, and consequently is not easy to attach to the controller box. The section between the device and the controller can be continued with a flexible cable. The second objective is, of course, the issue of protection.

Diagram of LP1 connection:

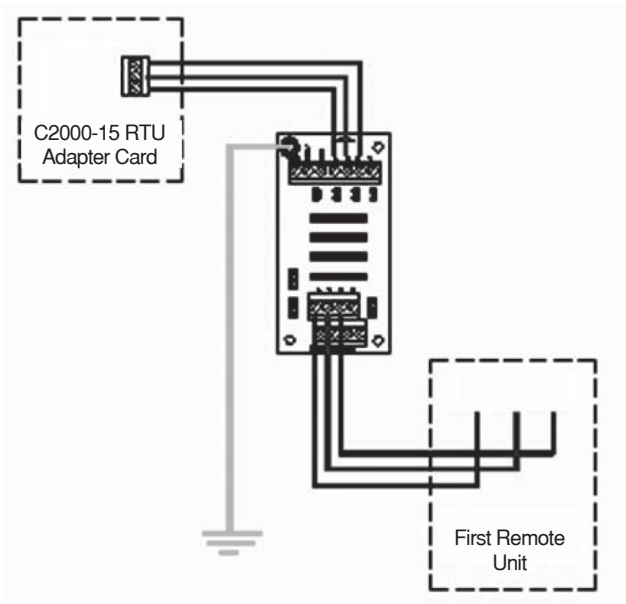

Appendix 1: Cable Remote Terminal Units (CRTU)

Operation of Remote Units Via the Controller:

Once an RTU is connected and communicates with the controller it can be immediately used if any of its I/O elements are defined. Nevertheless, the Open Field software consists of a mechanism which enables you to view each RTU status and define which are supposed to be connected and should alert upon disconnecting. (See CRTU definitions in the Open Field Manual).

Defining Inputs and Outputs for Remote Units:.

Remote Unit Tester

The Remote Unit Tester is a tool that assists in the establishment and maintenance of the remote unit system. The Tester enables inspection of the proper working order of communication and the switch definitions of the unit independently of the entire system. The Tester makes it easier to isolate and locate a fault or failure.

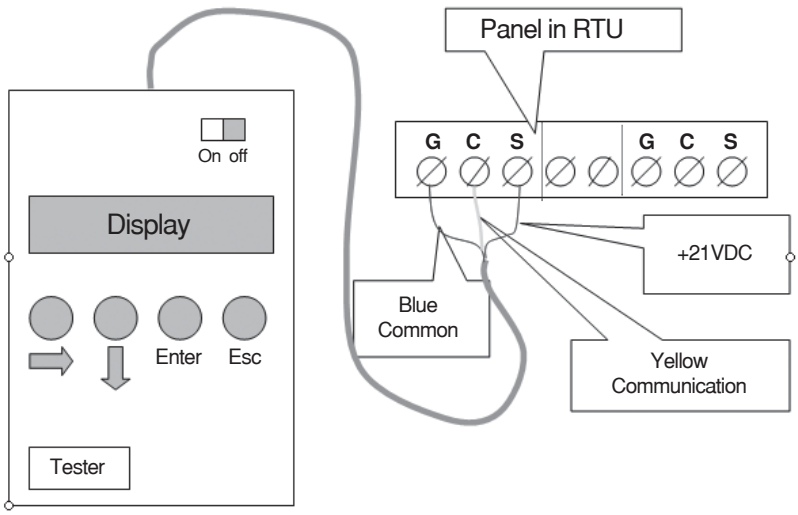

Operating Instruction

1. Pull out the connector of the communication line from the card of the unit you want to test. For 2-2 cards, you must turn off the controller and take out each wire separately, since there is no pull out connector.
2. Connect the three wires to the tester, as described in the diagram. Warning! Do not turn the Tester on before it is connected!
3. Turn the Tester on by pressing the switch. On the panel you'll see the following message:

   Wait for comm.

   Wait 60 seconds. If the unit is in proper working order, you'll see the following message:

Appendix 1: Cable Remote Terminal Units (CRTU)

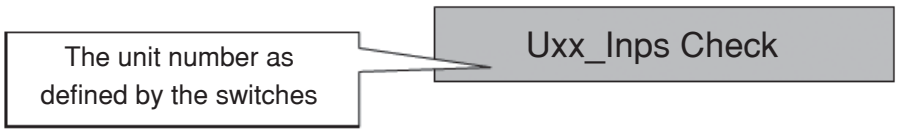

You are currently in the first of three options. Select the desired option by pressing one of the following options:

Inps Check	Discrete inputs check
Outs Change	Outputs check
Analog Check	Analog inputs check

Time interval for changing from one option to another is 2 seconds.

4. Testing discrete inputs: scroll down to Uxx_Inps Check and Press **Enter**. After a short interval, the current status of the inputs will be displayed in the following manner: Inputs: - - - * - - - -
   The order is from left to right. A dash sign indicates open contact, and an asterisk indicates close contact. In this example, input 3 is in closed status and all other inputs are in open status.

5. Press Esc and the display will show the current value of the input meters. Press Esc once again to return to the main menu.

6. **Changing an Output's Status**: In the main menu, press ⇩ to outputs testing Uxx_Inps Check menu and Enter to: Outputs: - - - - - - - Move the cursor to the required output using the ⇨ key and change the status so that an asterisk is displayed by using the ⇩ key. Pressing Enter will change the status of the output and immediately return you to the main menu. Note! Before completing the test, you must return to this menu and close all the outputs that were opened for testing purposes.

7. **Analog Input Status**: In the main menu, press ⇩ twice to Uxx_Analog Check and press Enter. The following display will show:

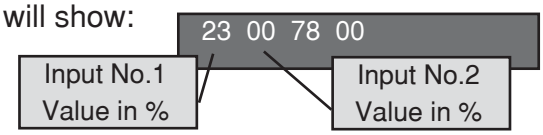

The sensor definitions in the remote unit are not known to the controller. The sensor's full scale is displayed here in values of 0 to 99.

8. At the end of the test, turn off the Tester. Return the line to its original location. Recheck the order of the connections and activate the controller.
   Remark: One of the possible faults is a unit that transmits communication continuously. The Tester will not uncover this fault. The fault is characterized by the fact that all other units will be displayed with software faults (621), and only the faulty unit will be displayed as Normal.

Appendix 1: Cable Remote Terminal Units (CRTU)

Troubleshooting:

Buzzer - Each CRTU card is equipped with a beeper that indicates its operation status:

A valid card will produce a short (½ sec) beep once every 7 seconds

Connecting card will produce long beeps (1 sec. On, 1 sec Off)

A faulty card with valid power supply (communication problem) will produce short frequent beeps (½ sec. On, ½ sec. Off). Every non-communicating card must be immediately replaced.

LED analyzer - The C2000-15 card is utilized with a pair of communication indicator LEDs. In normal operation both LEDs will blink alternately. If the communication is interrupted or disconnected - only the Tx led will blink.

Elimination – The most efficient troubleshooting method. In many malfunction cases it will be difficult to point at the faulty units even with the help of the vocal analyzing system. The reason is that a fault in one unit may appear also as disturbing the entire system (if the nature of the fault is high power consumption or uncontrolled transmission).

Pulling out the plug from a unit is breaking the chain of communication to the rest of the line. It is advised to first disconnect at a point between the suspected area and check if the remaining part returns to normal.

If it doesn't – try to connect just one unit directly to the controller to verify the validity of the C2000-15 adapter. Repeat that test with at least 3 units (or one new card) before concluding that the C2000-15 is faulty. A faulty C2000-15 should be replaced.

Line problems - The underground laid cable may become a weak point with time. 3 different problems may occur:

1: Break – In all 3 wires or part only.

2: Short – Between the wires of the cable.

3: Ground leak. – From one wire or more.

Step A) Basic cable test: Pull out all the RTUs connectors and make a bridge to line up the entire system.

Step B) Use Multi meter to check resistance between the wires. There should be some resistance. If there is no resistance - **case 2 is your problem**. Find the faulty part moving down the line and replace the cable in that part.

Step C) Connect a 9V battery to 2 wires of the cable at one end. Check the voltage on the remote end. Should the voltage drop – **Case 3 is your problem.** Find the faulty part moving down the line and replace the cable in that part. Repeat that test in both combinations of wires. **Remove the battery.**

Step D) Connect 2 of the wires at one end and check electrical resistance at the remote end. The value should not exceed 50Ω. **A higher value indicates a problem in the cable size or length. A reading higher than 20kΩ indicates case 1**.

Find the faulty part moving up the line and replace the cable in that part. Repeat this test for both combinations of wires.

Appendix 1: Cable Remote Terminal Units (CRTU)

Drafts:
RTU 2-4 Rev. 4

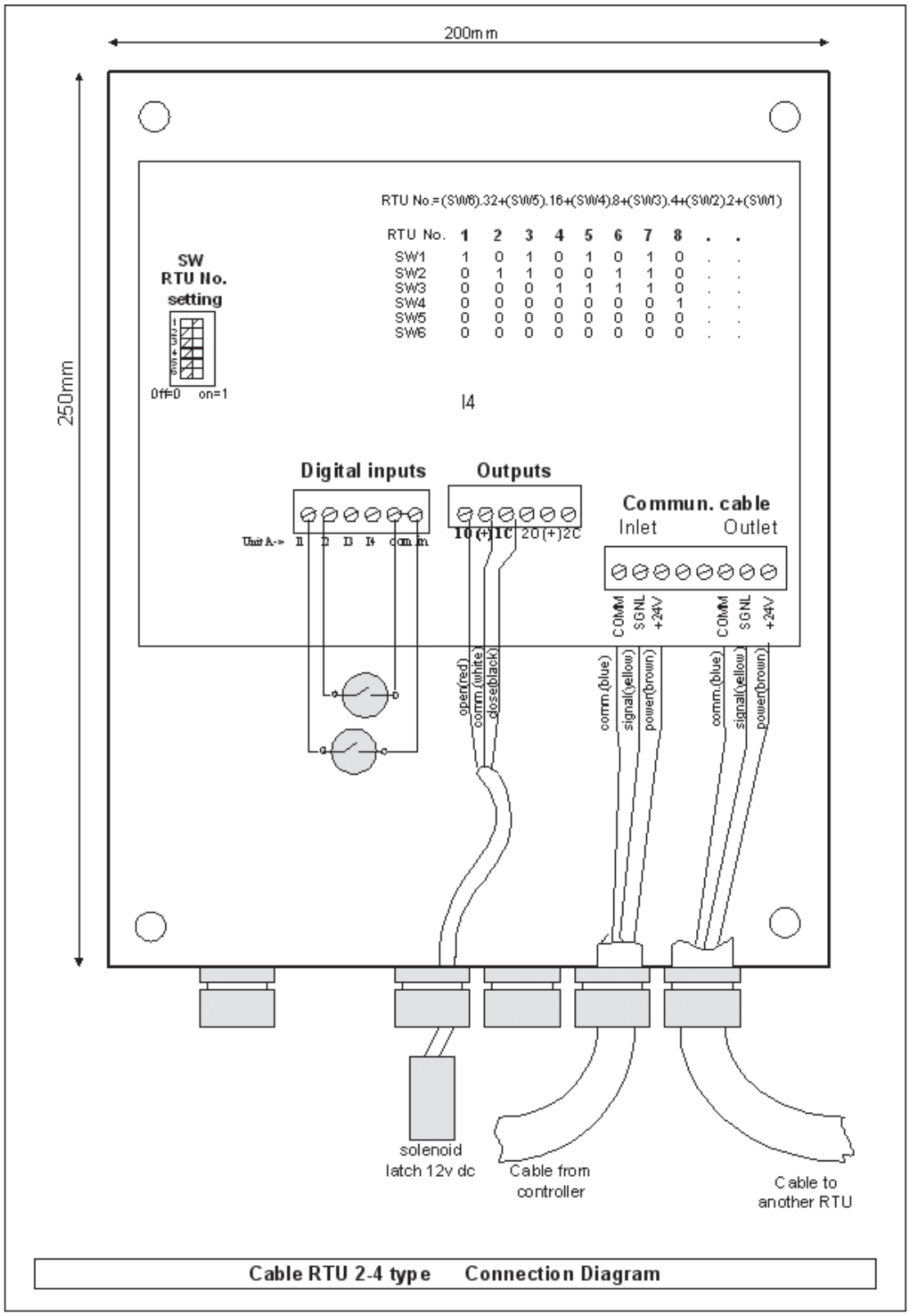

Cable RTU 2-4 type Connection Diagram

Appendix 1: Cable Remote Terminal Units (CRTU)

RTU 4-8-4 Rev. 4

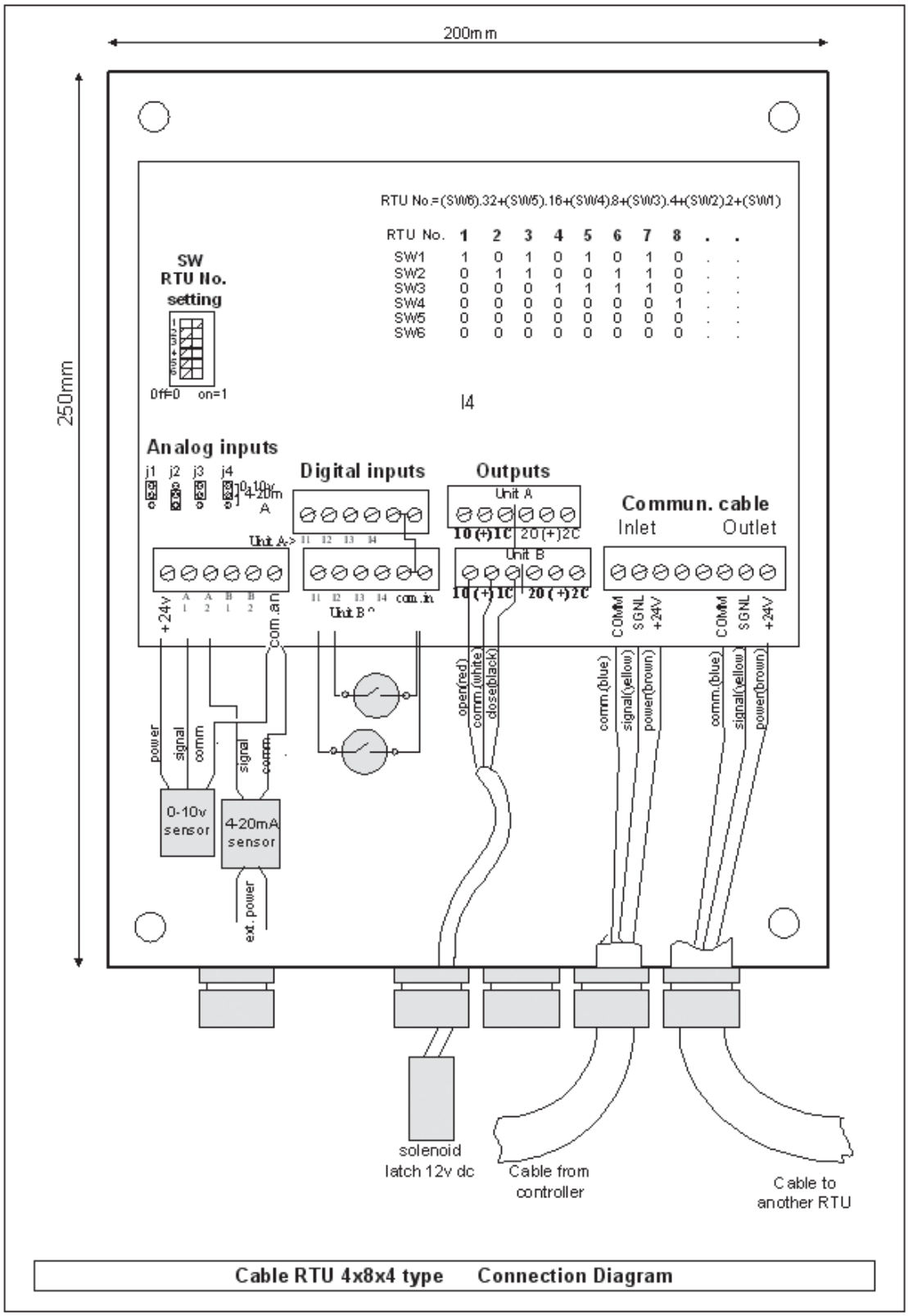

Cable RTU 4x8x4 type Connection Diagram

Appendix 2: Radio Remote Terminal Units (RRTU)

Control System for Remote Valves via RF

General Description

Galcon's RRTU is a set of a single transmission station and endless number of receivers that operate valves. The transmitter is encoded by a card that fits the standard slot in Galileo 2000 or Galileo Expansion. Each receiver is set to respond to a certain address that is assigned to a valve in the controller. Many receivers can be set to the same address but they will all respond to the same valve.

The address of the RRTU is set by special programmer (see below). The address is the number of the first output whilst the following outputs take the consecutive number. For example: The numbers of the outputs of a RRTU of 4 outputs set to number 6 are 6,7,8,9. In order to convert that number of the RRTU output into the Output code of the Open field system do the following:

1 - The last digit from the left is: 1 – in the case of an odd number and 2 – in the case of an even number.

2 - The 3 digits after the point are calculated according to:

a. If the number is even – the number is divided by 2.

b. If the number is odd – the number + 1 divided by 2.

3 - The first digit (before the point) from the left is 2 for RRTU (0 for local and 1 for CRTU)

For Example: Output that is defined as No. 28 at the field (by the programmer) is translated into the code: 2.0142. The last number is 2 (because it is an even number), the three digits after the point are 014 = 28 /2, and the digit before the point is 2 for RRTU.

In the same way Output No. 29 is 2.0151.

Appendix 2: Radio Remote Terminal Units (RRTU)

Technical specifications:

Transmitter:

Type:	Motorola GM 340/350
Rated voltage:	DC 12V
Power at sleep:	250 ma
Transmission power:	5W
Average power:	300 ma
Frequency F1 Standard:	445.3625 MHz.
Frequency F1 Option B:	458.5750 MHz.
Enclosure rate:	IP 52

Receiver:

Rated voltage:	DC 3.6V (8 amph)
Average power:	0.5 micro A
Power source:	Lithium battery (last for 2 yaers)
Outputs:	4 latch, NPN transistor, 2 wires, polarity change
Latch pulse V:	18V
Latch pulse length:	80 msec.
Enclosure rate:	IP 68

Appendix 2: Radio Remote Terminal Units (RRTU)

Installation:

Step 1: Mount the radio board on a wall near the Galileo controller.

Step 2: Shut Galileo power down and insert the adapter card in one of the free slots in the Galileo W/2000 or in an expansion box. Turn the power ON.

Step 3: Enter Galileo I/O card setup and define WireRTU at the appropriate slot.

Step 4: Connect the data cable to CN1 in the adapter card and to the data input in the transmitter.

Step 5: Mount the antenna as high as the cable allows. Fasten the antenna connector with your fingers as hard as you can. Do not use pliers.

Appendix 2: Radio Remote Terminal Units (RRTU)

Chapter 1: Setup of the RRTU Adapter Card

The GALILEO W/2000 radio TX interface card is designed to be installed in the GALILEO W/2000 irrigation controller and to be operated in conjunction with the Darch G3.1 or later version of radio receiver switching modules. There are two versions of software supported by this card. They are software versions GALTX VER6.5 which supports 128 outputs and software version GALTX VER7.0 which supports 256 outputs. This document provides general information relating to the cards set-up, installation and operation procedure.

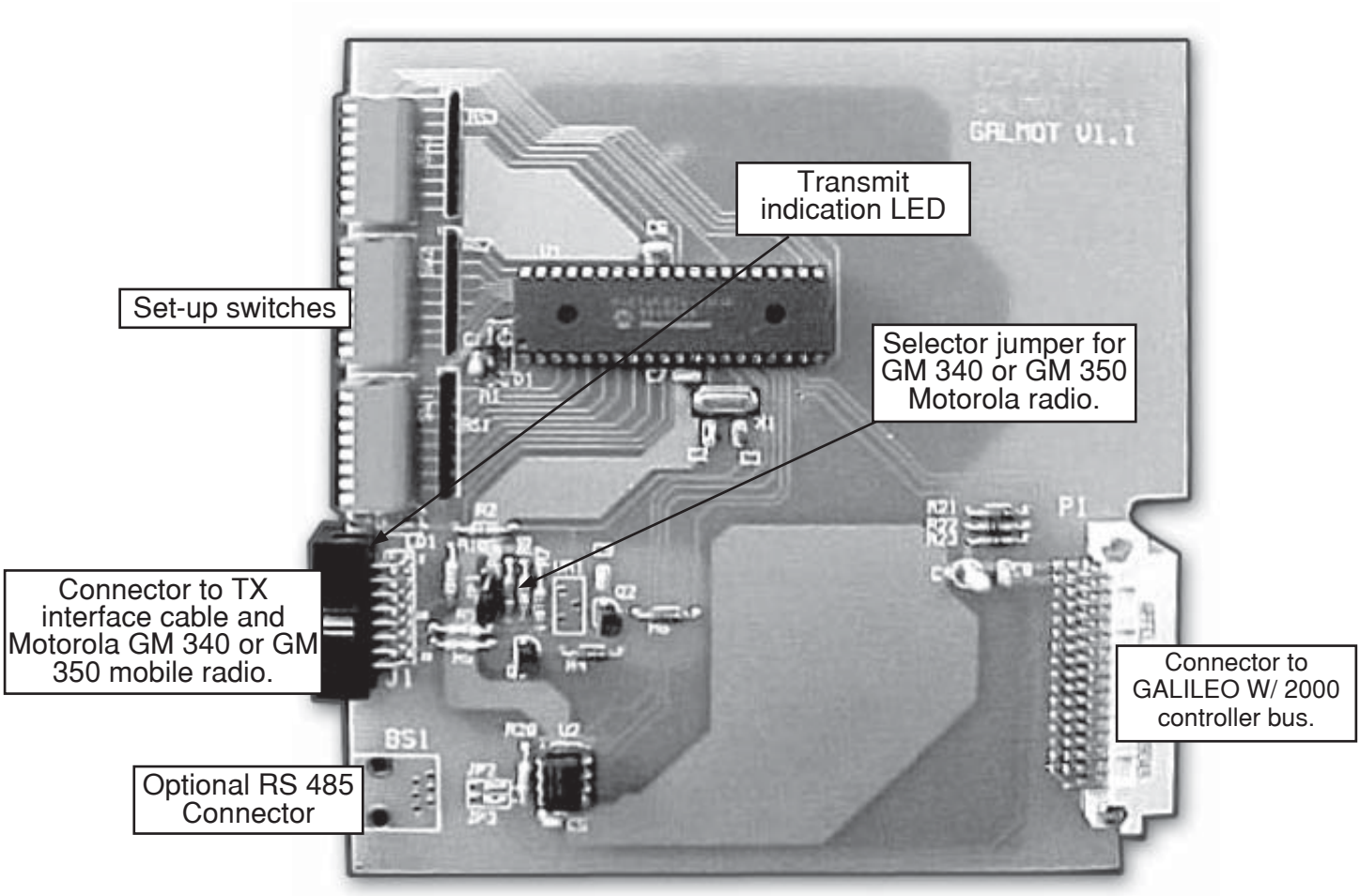

Appendix 2: Radio Remote Terminal Units (RRTU)

SETUP

The TX Interface Card
NOTE!!! It is only possible to make setting changes to the card whilst the card is unplugged from the system. As long as the card is provided with power, no switch changes will be effected.

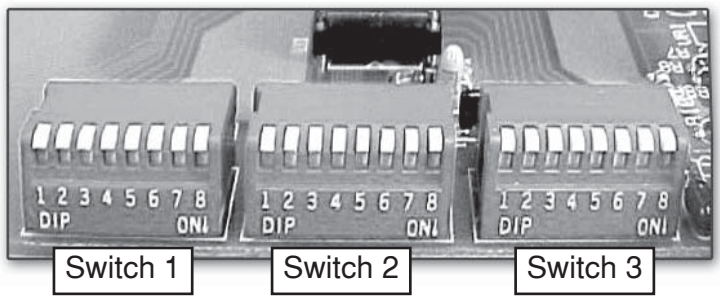

Switch 1 - Is used to set the maximum number of radio outputs to be controlled by the GALILEO W/2000.

All switches off = Maximum 32 outputs active (Supported by both software versions)
Switch 1.1 – On = maximum 32 outputs active (Supported by both software versions)
Switch 1.2 – On = maximum 64 outputs active (Supported by both software versions)
Switch 1.3 – On = maximum 96 outputs active (Supported by both software versions)
Switch 1.4 – On = maximum 128 outputs active (Supported by both software versions)
Switch 1.5 – On = maximum 160 outputs active (Supported by software version GALTX VER7.0)
Switch 1.6 – On = maximum 192 outputs active (Supported by software version GALTX VER7.0)
Switch 1.7 – On = maximum 224 outputs active (Supported by software version GALTX VER7.0)
Switch 1.7 – On = maximum 256 outputs active (Supported by software version GALTX VER7.0)

NOTE!!! The system sees the highest selected switch and will allow operation of this number of outputs. If more than 128 outputs have been set to operate from one card, a second system identity immediately following the first system identity set on switch two below will be used by the card. If more than 128 outputs are to be used by the card, a system ID of 255 cannot be used.

Switch 2 - Is used to set the systems identity

Switch 1.1 – Binary 128 or ID 128
Switch 1.2 – Binary 64 or ID 64
Switch 1.3 – Binary 32 or ID 32
Switch 1.4 – Binary 16 or ID 16
Switch 1.5 – Binary 8 or ID 8
Switch 1.6 – Binary 4 or ID 4
Switch 1.7 – Binary 2 or ID 2
Switch 1.8 – Binary 1 or ID 1

Appendix 2: Radio Remote Terminal Units (RRTU)

System I.D. Table

Switch No.	Switch 1	Switch 2	Switch 3	Switch 4	Switch 5	Switch 6	Switch 7	Switch 8
ID or Binary No.	(128)	(64)	(32)	(16)	(8)	(4)	(2)	(1)
0	Off	Off	Off	Off	Off	Off	Off	Off
1	Off	Off	Off	Off	Off	Off	Off	On
2	Off	Off	Off	Off	Off	Off	On	Off
3	Off	Off	Off	Off	Off	Off	On	On
4	Off	Off	Off	Off	Off	On	Off	Off
5	Off	Off	Off	Off	Off	On	Off	On
6	Off	Off	Off	Off	Off	On	On	Off
7	Off	Off	Off	Off	Off	On	On	On
8	Off	Off	Off	Off	On	Off	Off	Off
9	Off	Off	Off	Off	On	Off	Off	On
10	Off	Off	Off	Off	On	Off	On	Off
11	Off	Off	Off	Off	On	Off	On	On
12	Off	Off	Off	Off	On	On	Off	Off
13	Off	Off	Off	Off	On	On	Off	On
14	Off	Off	Off	Off	On	On	On	Off
15	Off	Off	Off	Off	On	On	On	On
16	Off	Off	Off	On	Off	Off	Off	Off
...	...	...	...	...	...	...	...	...
252	On	On	On	On	On	On	Off	Off
253	On	On	On	On	On	On	Off	On
254	On	On	On	On	On	On	On	Off
255	On	On	On	On	On	On	On	On

Any ID number from 0 to 255 can be set using a combination of the switches.

NOTE!!! It is not advisable to set an ID that is used by another system located within 150 kilometres radius from this unit.
If more than 128 outputs have been set to operate from one card, a second system identity, immediately following the first system identity set on switch two will be used by the card.
If more than 128 outputs are to be used by the card, a system ID of 255 cannot be used.

Appendix 2: Radio Remote Terminal Units (RRTU)

Switch 3 - Is used to put the unit into test mode and offers 3 extra system ID switches.

Switch 3.1 – Reserved for future use.
Switches 3.2, 3.2 and 3.4 have the following use:
For normal operation with GALILEO W/2000 set switches 3.2, 3.3 and 3.4 to “Off”
For testing outputs 1 and 2 in a switching loop of 30 seconds set switches 3.2 to “On”, 3.3 to “Off” and 3.4 to “On”.
Switches 3.5, 3.6 and 3.7 are extra system I.D.’s
Switch 3.8 – Reserved for future use.

Jumper JP1 is used to select the radio that is being used by the system.

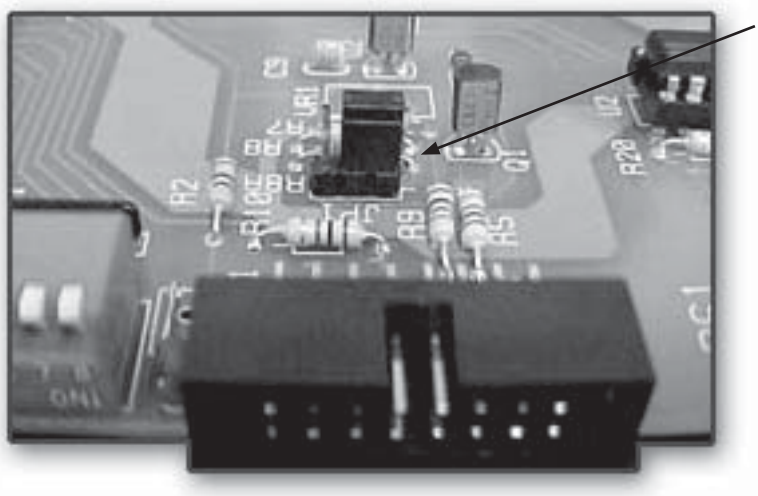

If a Motorola GM 340 mobile radio is to be used, the jumper should be in this position.

If a Motorola GM 350 mobile radio is to be used, the jumper should be between the central pin and the top pin.

The GALILEO W/2000 Controller

Define the bus slot number into which the TX interface card is to be installed and program the controller for a Radio RTU under main menu 7 (Set-up) and sub menu 4 (I/O Cards).
Activate the number of radio RTU’s to be used by the system under main menu 6 (Technical Info.) and sub menu 2 (RTU Units).

NOTE!!! If a RTU fault is generated by the system, deactivate RTU faults in the alarm menu.

Appendix 2: Radio Remote Terminal Units (RRTU)

INSTALLATION

Once all equipment has been mounted, plug the TX interface cable into the rear of the Motorola radio and the transmitter interface card as per the hook-up detail provided below.

For the Motorola GM 340 Radio

Version 1.10

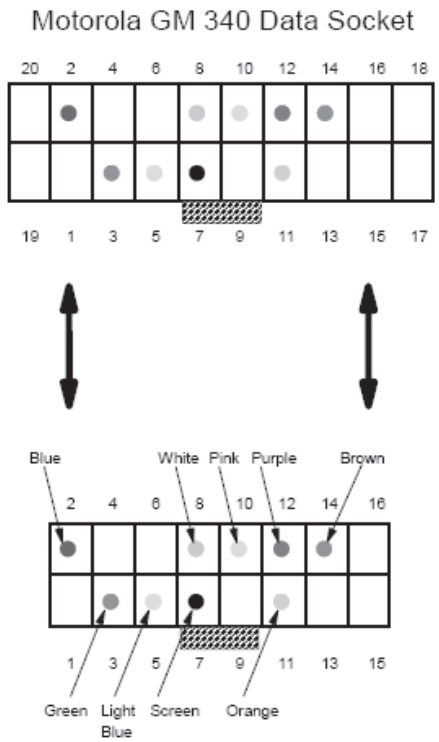

TX Interface Cable Plug Pin-Out
Radio Side
(veiwed from the cable side)

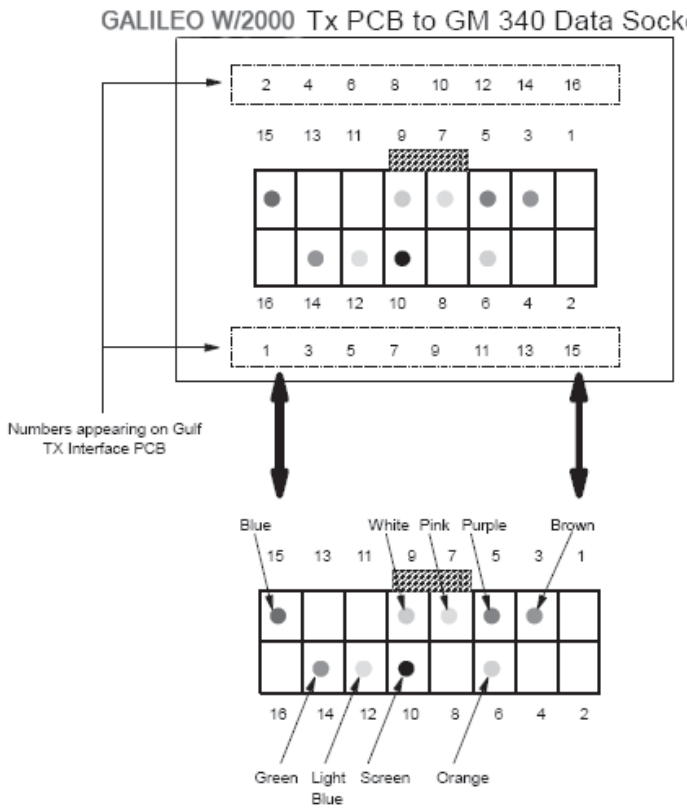

TX Interface Cable Plug Pin-Out
Card Side
(veiwed from the cable side)

Appendix 2: Radio Remote Terminal Units (RRTU)

For the Motorola GM 350 Radio

Version 1.10

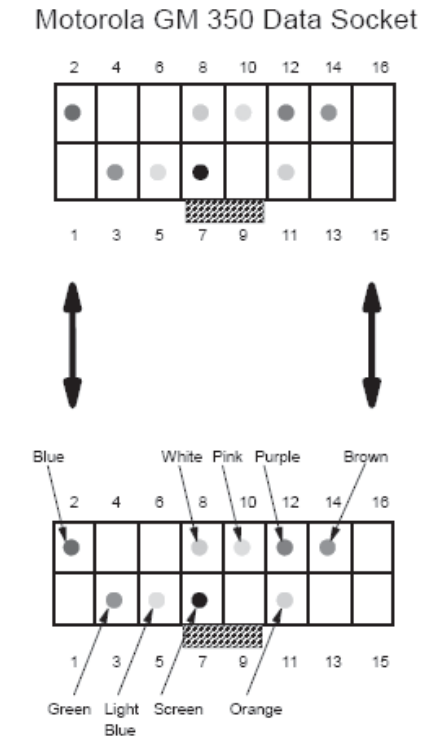

TX Interface Cable Plug Pin-Out
Radio Side
(veiwed from the cable side)

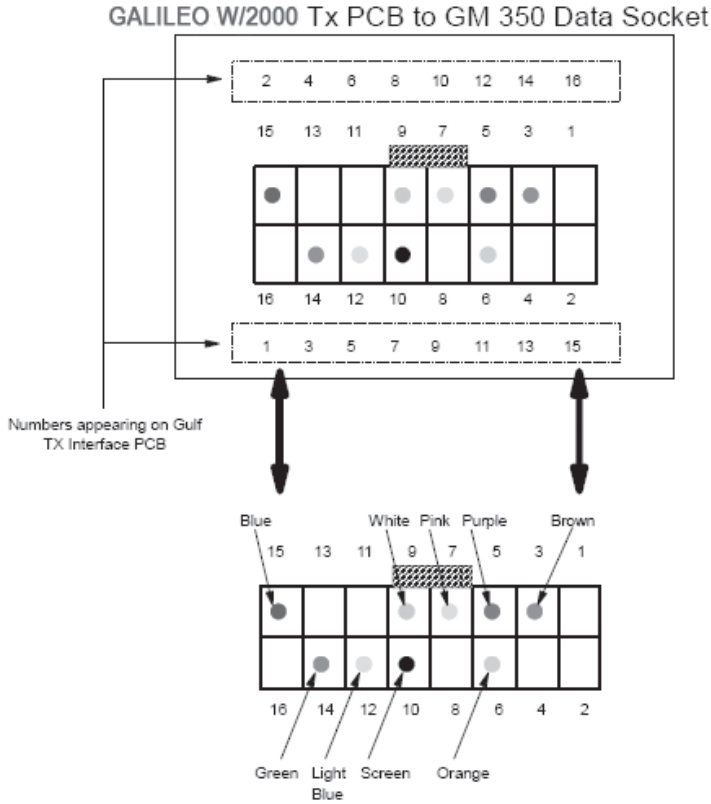

TX Interface Cable Plug Pin-Out
Card Side
(veiwed from the cable side)

Appendix 2: Radio Remote Terminal Units (RRTU)

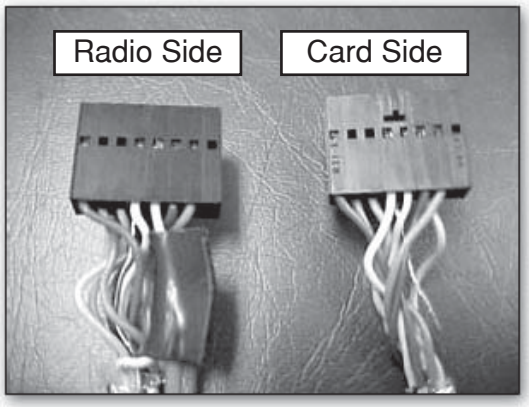

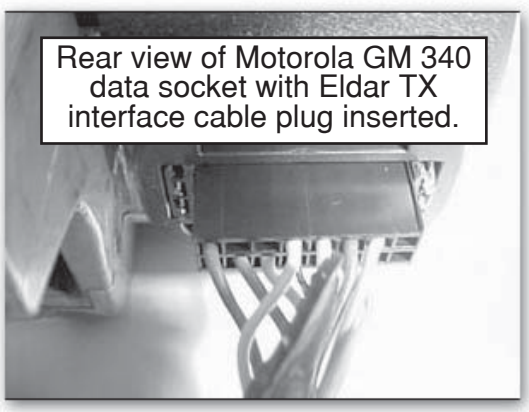

Connect the “Red” wire on the radio end of the TX cable to the positive terminal of the Radios 12 volt power supply and to the positive terminal of the 12 volt backup battery. During a failure of power to the power supply, the radio will utilize the backup battery to power the radio.
This completes the set-up and installation of the transmitter interface card.

Appendix 2: Radio Remote Terminal Units (RRTU)

Chepter 2: Operating the RRTU Programmer

There is a special programmer connected to the RRTU module for defining the number and other settings of the RRTU.

CONNECTING THE HAND HELD PROGRAMMER REFERRED TO AS THE HHP.

- Open the battery housing on the receiver module by removing the rubber plug from the casing (Do not use any sharp instruments to achieve this).
- Disconnect the battery from the Receiver module.

Receiver Module Version G3.1 – The HHP will be equipped with an interfacing harness containing 4 wires namely Red (+), Black (-), White (Programming) and Purple (Programming).

- Connect the red and black wires from the HHP to the battery connection of the Receiver module.
- Connect the white and purple wires of HHP to white and purple wires of Receiver module.

Receiver Module Version G3.2 (March 2003) – The HHP will be equipped with an interfacing harness containing 5 wires namely Red (+), Black (-), White (Programming), Purple (Programming) and Green (Reset). The interfacing harness will also be equipped with a reset button.

- Connect the red and black wires from the HHP to the battery connection of the Receiver module.
- Connect white, purple and green wire of HHP to the white, purple and green wires of the Receiver module. The receiver module will be fitted with a Molex connector to prevent the incorrect connection from takingplace.

GENERAL OPERATION OF THE HHP.

STEP 1

Press any key on the keypad to activate unit .The following will appear:
The software version previously programmed into the receiver module that is required to operate the older receiver module (G2) or the newer receiver module (G3).

E.G. OLD =G2 Version of receiver module and NEW = G3 Version of receiver module.
The receiver modules address (I.D.) and the first output number of the receiver module as previously programmed into the unit.

The number of outputs previously programmed into the receiver module.
E.G. A2 = 2 outputs or A3 = 3 outputs.

The maximum number of outputs the receiver module has been previously programmed to handle. E.G. It will be either Max2 for a 2 line module or Max4 for a 4 line module.
NOTE!!! This setting cannot be adjusted through the HHP and is set-up as a factory setting.

Appendix 2: Radio Remote Terminal Units (RRTU)

STEP 2

Press MENU. The LOGGER MAIN MENU will appear. Use down or up arrows to move between the various sub menus.

RESET THE RECEIVER MODULE (Only Applicable With Module Versions 3.2)

Press the button on the DB connector (where the interfacing harness cables leave the HHP) for a period of 2 seconds. This resets the processor in the module allowing immediate programming of the module without delay.

PROGRAMMING THE RECEIVER MODULE.

STEP 1

Setting the output addresses on the receiver module.
In the logger main menu, use the down arrow until menu selection 3 is reached. I.E. Valve Num (ber). Press ENTER.
Use arrows to select the appropriate address for the first valve on the unit.
Press ENTER again.
E.G. If the module is set to 5, the first output will be 5 and the other will follow in sequence. A module with 3 outputs will be addressed as follows: Output 1 will be address 5, output 2 will be address 6 and output 3 will be addressed 7.
NOTE!!! Avoid setting the receiver modules first output address in a region that will cause the second, third or fourth output to overlap the output values 32 and 33, 64 and 65, or 96 and 97.
E.G. If a 4 line receiver is set as 31, the other outputs will be 32, 33 and 34. Outputs 33 and 34 will not be functional.
The modules output addresses are now set on the HHP and require downloading to the receiver module once all other programming is completed (See step 8).

STEP 2

Setting the number of outputs required per module. In the logger main menu, use arrows to move to menu selection 4. I.E. Valve Amount. Press ENTER.
Use arrow to select number of outputs that will be used on the module.
NOTE!!! On a module that has been factory set for 2 lines only; a maximum of 2 outputs can be selected. On a module that has been factory set for 4 lines only; a maximum of 4 outputs can be selected. It is possible to select less than the factory set amount but a minimum of 1 output must be selected.
Make your selection and then press ENTER.
The modules output numbers have now been set on the HHP and require downloading to the receiver module once all other programming is completed (See step 8).

STEP 3

Setting the modules I.D. so that the receiver module operates within a specific system only. (This I.D. is the same I.D. as used by this systems transmitter device).
In the logger main menu, use arrows to move to menu selection 5. I.E. System I.D.
Press ENTER.

Appendix 2: Radio Remote Terminal Units (RRTU)

Use arrow to select the system I.D. The selection range is from 000 to 255.
Once a number corresponding with the number used by this system transmitter interface card is selected, press ENTER again.
NOTE!!! It is important to make sure that this system cannot interfere with another system which utilizes the same I.D.

The modules systems I.D. has now been set on the HHP and requires downloading to the receiver module once all other programming is completed (See step 8).

STEP 4

Setting the receiver module software type (NEW is for the G3 version of receiver module and OLD is for the G2 version of receiver module).
In the logger main menu, use arrows to move to the menu selection 7. I.E. Unit Type
Press ENTER.
Use arrows to select between OLD and NEW receiver type.
NOTE!!! If the software version POPTX XX is available on the systems radio transmitter interface card, the module should be set to the NEW type. If the software version REMTX XX is available on the systems radio transmitter interface card, the module should be set to the OLD type.
Press ENTER.
The modules software version has now been set on the HHP and requires downloading to the receiver module once all other programming is completed (See step 8).

STEP 5

Downloading the receiver module settings from the HHP.
In the logger main menu, use arrows to move to menu selection 1. I.E. Program.
Observe both the green and the red L.E.D.'s on the receiver module that is about to be programmed. Press ENTER.
The Red and Green LED's should light up together, which means your settings are now being downloaded onto the receiver. Once the program has been downloaded and the module has been read by the HHP, both LED's will turn off.
The downloaded information will now appear on the screen of H.H.P.
The unit is now ready for field operation.

HOW TO READ THE RECEIVER MODULE.

Press MENU.
In the logger main menu, use arrows to go to menu selection 2. I.E. Read.
Press ENTER.
Observe the LED's on the receiver module that is about to be read.
The Red and Green LED's should light up simultaneously for approximately 5 seconds and then turn off.
The program data relevant to this module should then appear on the screen of the HHP.
If this data is correct, proceed to FINAL STEP below. If this data is incorrect, repeat steps 1 to 5 under "setting the receive module" above.

Appendix 2: Radio Remote Terminal Units (RRTU)

DISCONNECTING THE HHP FROM THE RECEIVER MODULE .

Disconnect the H.H.P. from the receiver module and reconnect the receiver modules battery.
The receiver module will re-activate immediately once the battery is reconnected.
The red and green LED's should light up.
The green LED will turn off and the red LED will remain on for 5 minutes after the battery was reconnected.
Should a radio signal applicable to this receiver module (ID being the same as the transmitted signal), be received by the unit, the green LED will flash briefly.
If data that pertains to one or more of the outputs has been received by the module, the output/s will be activated or deactivated dependant on the status requested. At this time the green LED will also flash briefly.